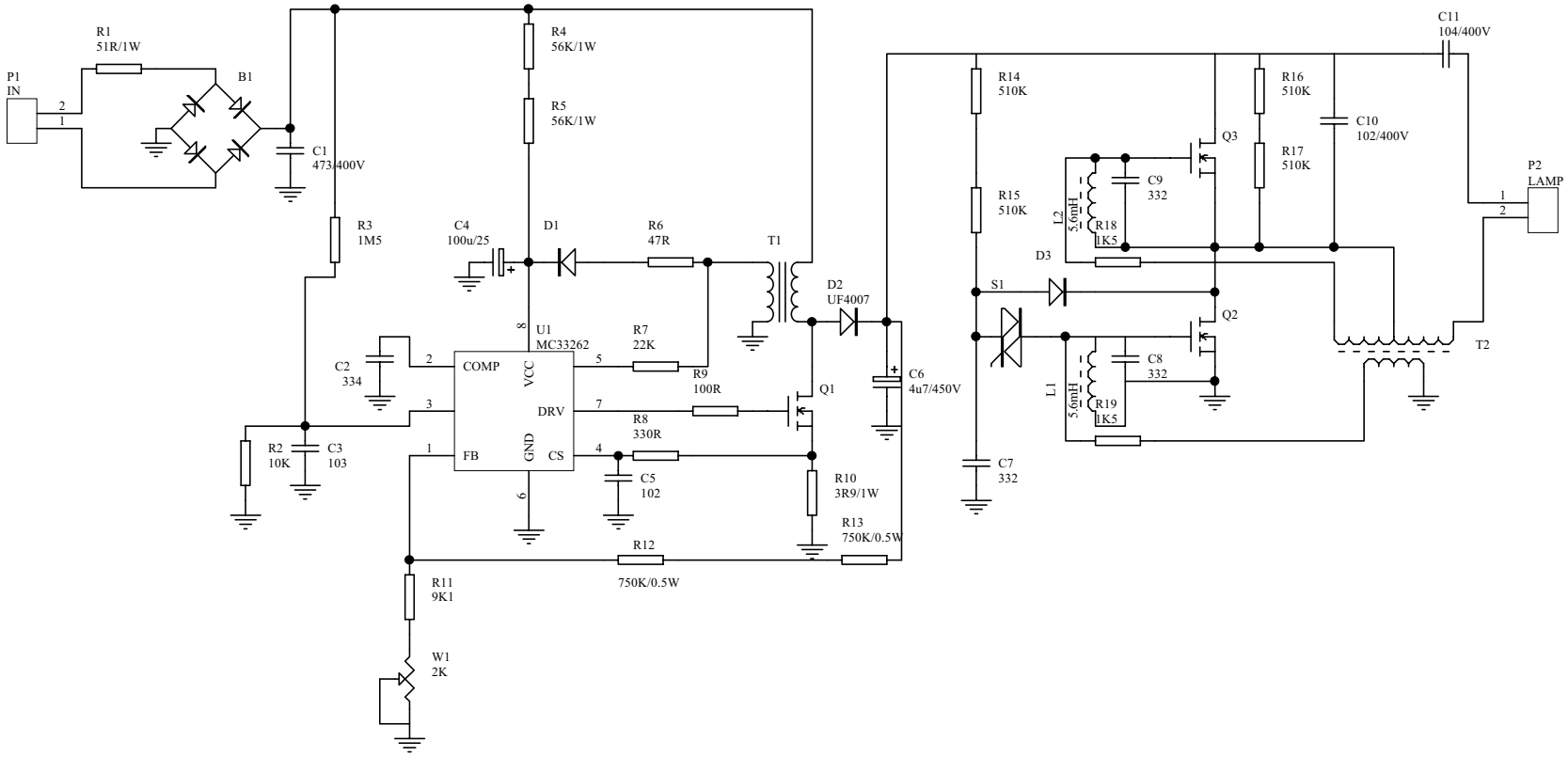

Title		
Size A4	Number	Revision
Date: 4-Sep-2003	Sheet of	
File: E:\ADVSCH\SCHFILE\TAIDENG1.S01	Drawn By:	