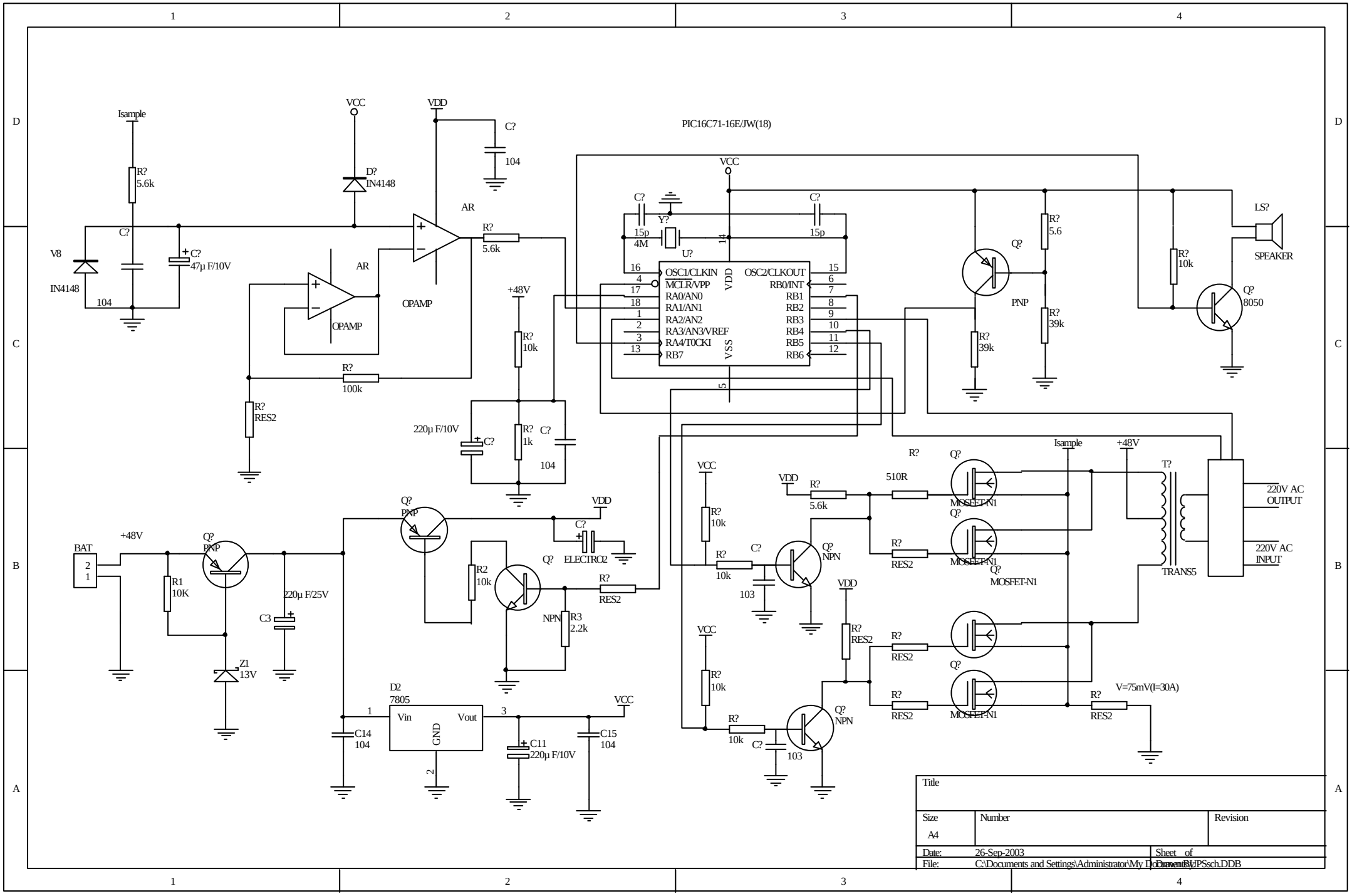
PIC16C71-16E/JW(18)
Isample
R? 5.6k
C? 104
V8
IN4148
C? 47µ F/10V
VCC
VDD
D? IN4148
AR
OPAMP
R? 5.6k
R? 100k
R? RES2
+48V
R? 10k
220µ F/10V
R? 1k
Y? 4M
U?
15p
OSC1/CLKIN
MCLR/VPP
RA0/AN0
RA1/AN1
RA2/AN2
RA3/AN3/VREF
RA4/T0CKI
RB7
OSC2/CLKOUT
RB0/INT
RB1
RB2
RB3
RB4
RB5
RB6
VSS
PNP
R? 39k
R? 5.6
LS?
SPEAKER
Q? 8050
BAT
R1 10K
Z1 13V
C3 220µ F/25V
Q? PNP
R2 10k
NPN
R3 2.2k
ELECTRO2
RES2
D2 7805
Vin
Vout
GND
C14 104
C11 220µ F/10V
C15 104
510R
MOSFET-N1
T? TRANS5
220V AC OUTPUT
220V AC INPUT
103
V=75mV(I=30A)
Title
Size A4
Number
Revision
Date: 26-Sep-2003
Sheet of
File: C:\Documents and Settings\Administrator\My Documents\UPSsch.DDB