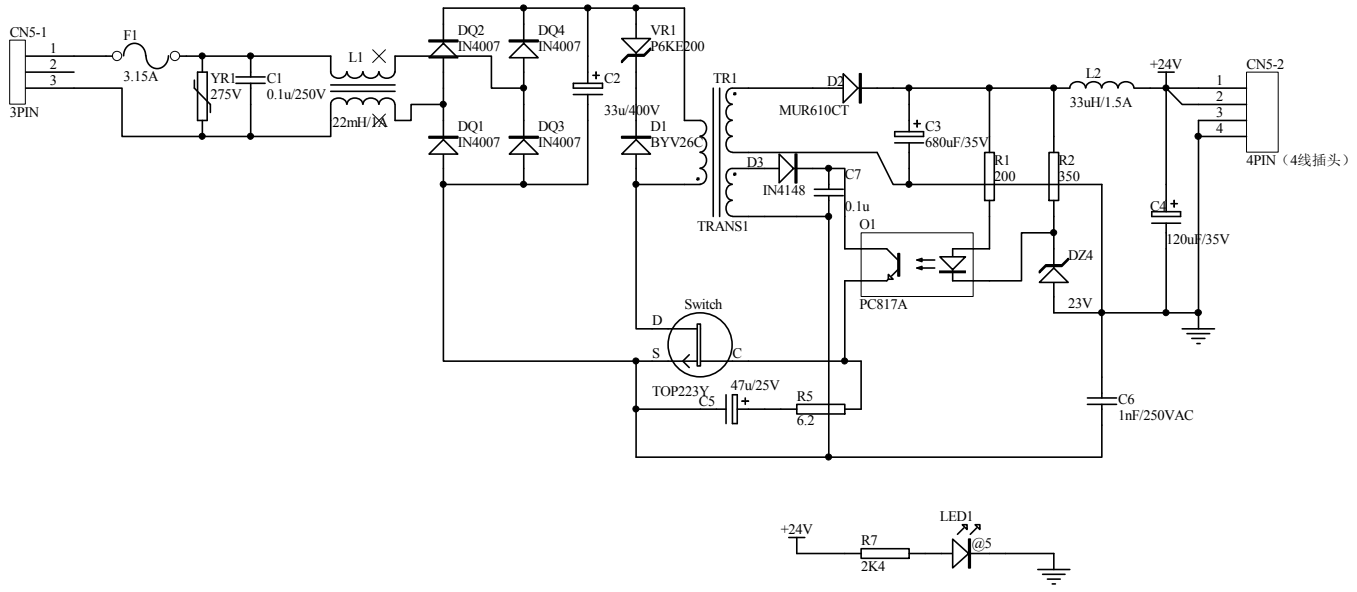

Title		
Size A	Number	Revision
Date: 4-Nov-2003	Sheet of	
File: D:\Program Files\Design Explorer 99 SE\WORK\demo.ddb	Drawn By:	