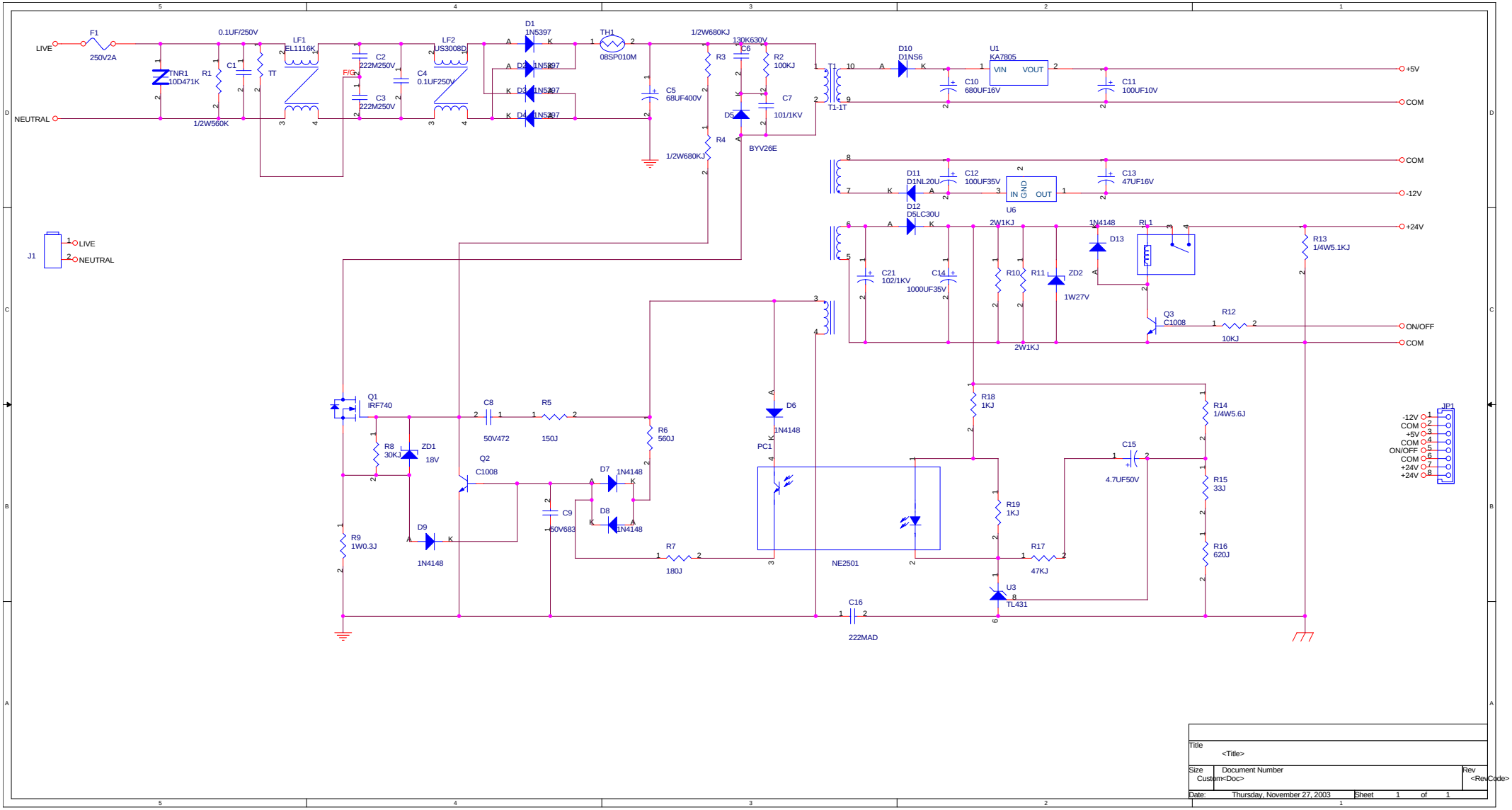

Title	<Title>	
Size	Document Number	Rev
Custom	<Doc>	<RevCode>
Date: Thursday, November 27, 2003	Sheet 1 of 1	