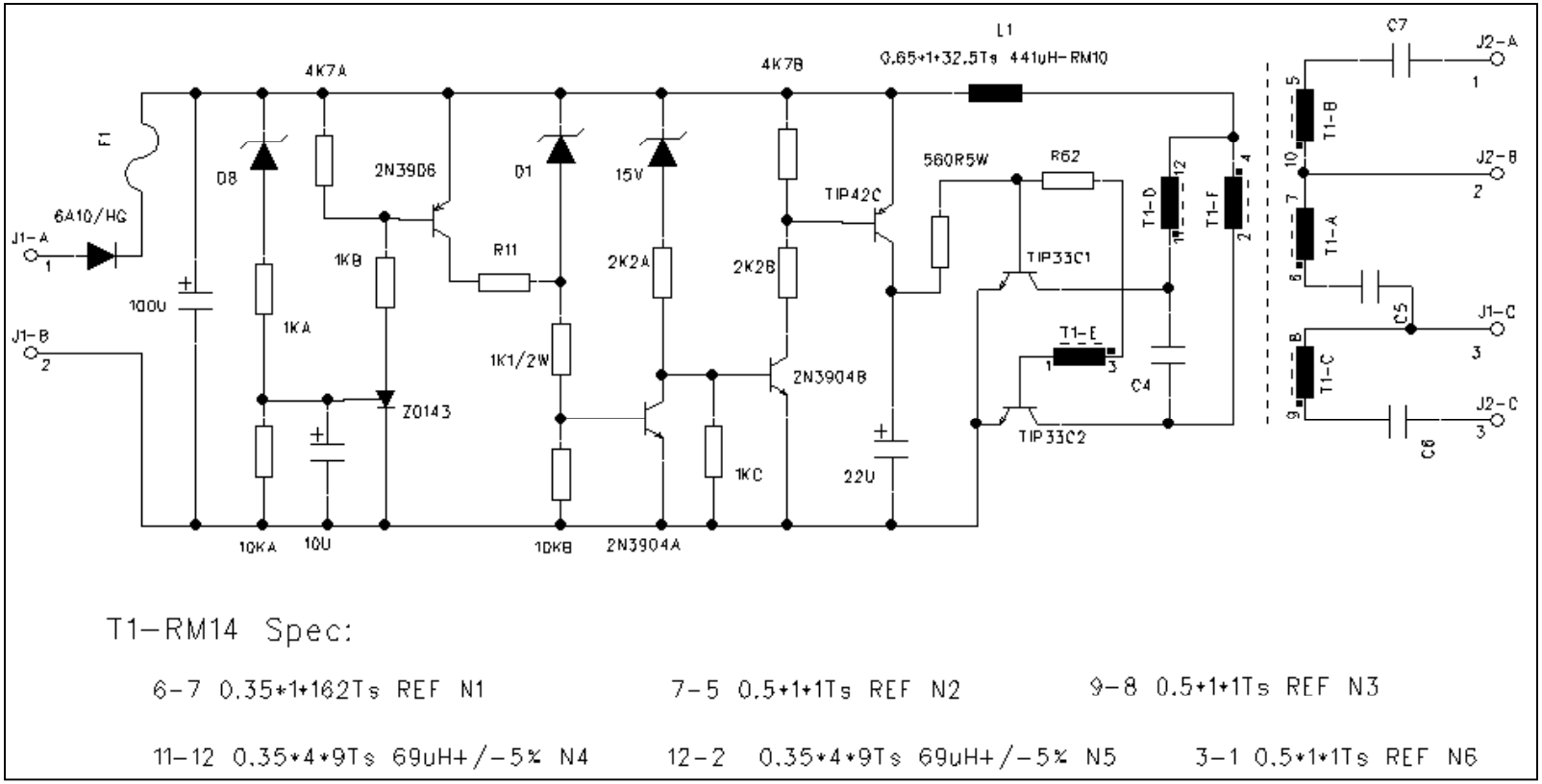

T1-RM14 Spec:

6-7 0.35+1+162Ts REF N1 7-5 0.5+1+1Ts REF N2 9-8 0.5+1+1Ts REF N3

11-12 0.35+4+9Ts 69uH+/-5% N4 12-2 0.35+4+9Ts 69uH+/-5% N5 3-1 0.5+1+1Ts REF N6