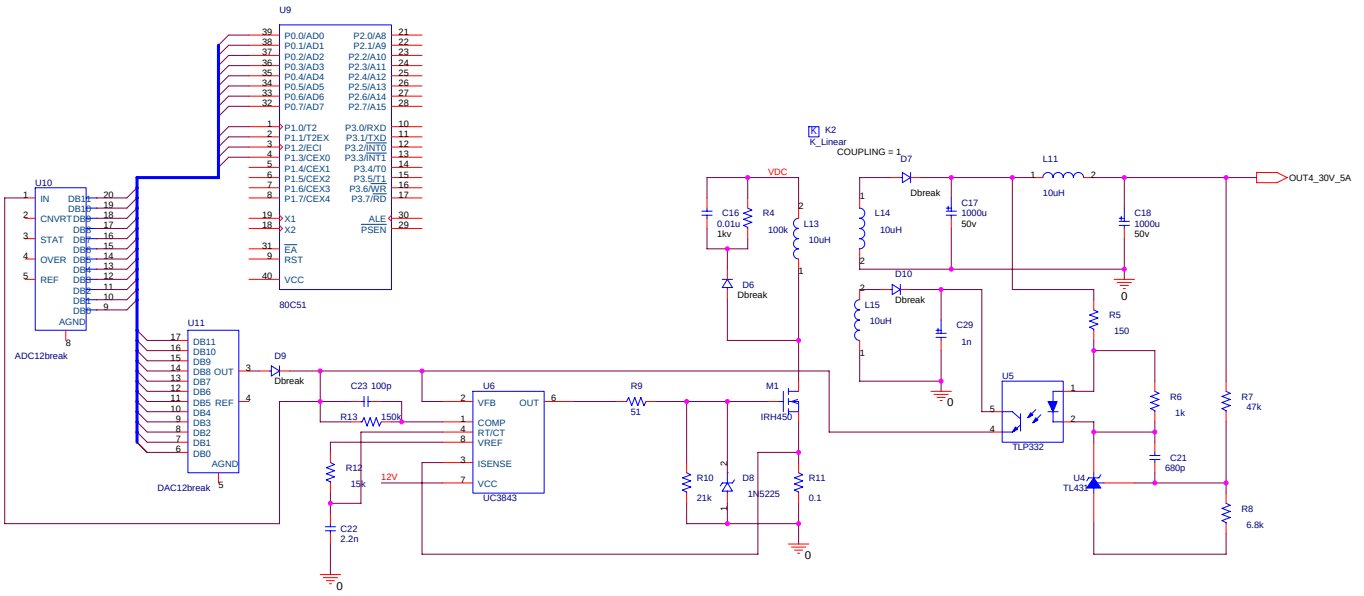

Title <Title>		
Size B	Document Number <Doc>	Rev <RevCode>
Date: Friday, July 23, 2004	Sheet 1 of 1	