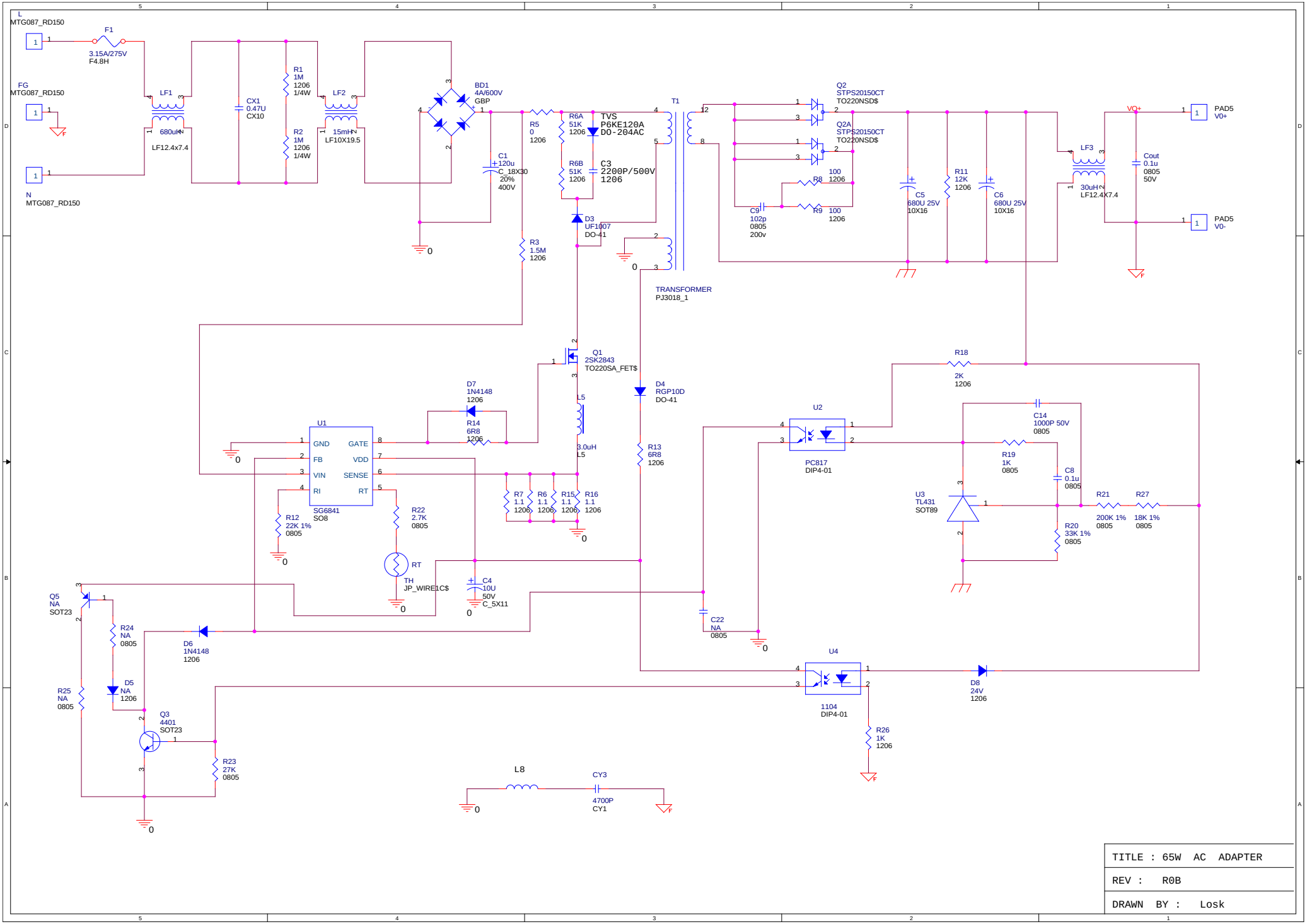
L
MTG087_RD150
F1
3.15A/275V
F4.8H
FG
MTG087_RD150
N
MTG087_RD150
LF1
680uH
LF12.4x7.4
CX1
0.47U
CX10
R1
1M
1206
1/4W
R2
1M
1206
1/4W
LF2
15mH
LF10X19.5
BD1
4A/600V
GBP
C1
120u
C_18X30
20%
400V
R5
0
1206
R6A
51K
1206
R6B
51K
1206
TVS
P6KE120A
DO-204AC
C3
2200P/500V
1206
D3
UF1007
DO-41
R3
1.5M
1206
T1
TRANSFORMER
PJ3018_1
Q2
STPS20150CT
TO220NSD$
Q2A
STPS20150CT
TO220NSD$
R8
100
1206
R9
100
1206
C9
102p
0805
200v
C5
680U 25V
10X16
R11
12K
1206
C6
680U 25V
10X16
LF3
30uH
LF12.4X7.4
VO+
Cout
0.1u
0805
50V
PAD5
V0+
PAD5
V0-
Q1
2SK2843
TO220SA_FET$
D4
RGP10D
DO-41
D7
1N4148
1206
R14
6R8
1206
L5
3.0uH
L5
U1
GND
FB
VIN
RI
GATE
VDD
SENSE
RT
SG6841
SO8
R12
22K 1%
0805
R22
2.7K
0805
RT
TH
JP_WIRE1C$
R7
1.1
1206
R6
1.1
1206
R15
1.1
1206
R16
1.1
1206
R13
6R8
1206
C4
10U
50V
C_5X11
R18
2K
1206
U2
PC817
DIP4-01
C14
1000P 50V
0805
R19
1K
0805
C8
0.1u
0805
U3
TL431
SOT89
R21
200K 1%
0805
R27
18K 1%
0805
R20
33K 1%
0805
C22
NA
0805
U4
1104
DIP4-01
D8
24V
1206
R26
1K
1206
Q5
NA
SOT23
R24
NA
0805
D6
1N4148
1206
R25
NA
0805
D5
NA
1206
Q3
4401
SOT23
R23
27K
0805
L8
CY3
4700P
CY1
TITLE : 65W AC ADAPTER
REV : R0B
DRAWN BY : Losk