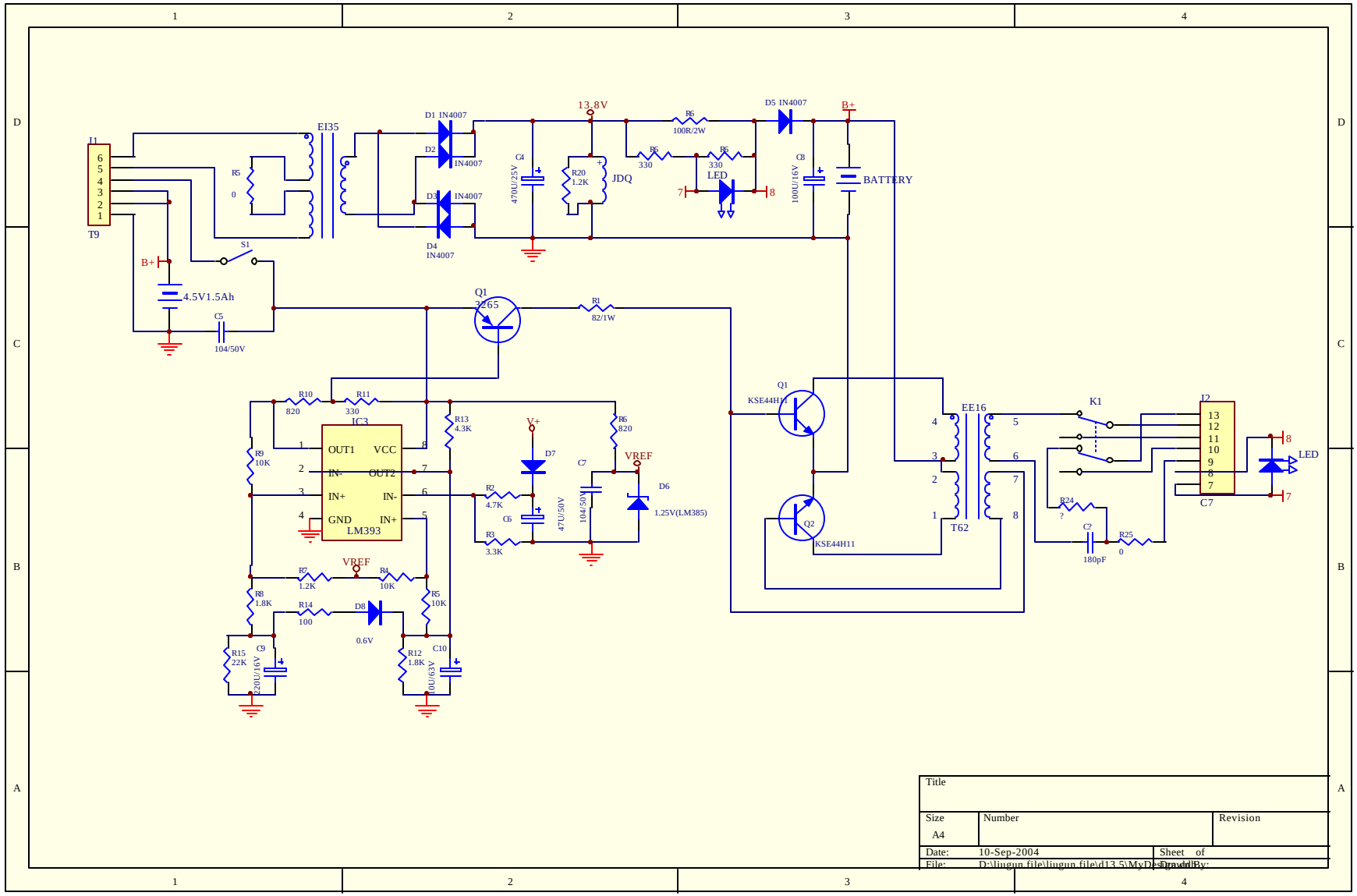

Title		
Size A4	Number	Revision
Date: 10-Sep-2004	Sheet of	
File: D:\lingun file\lingun file\d13.5\MyDesign.ddb	Drawn By:	