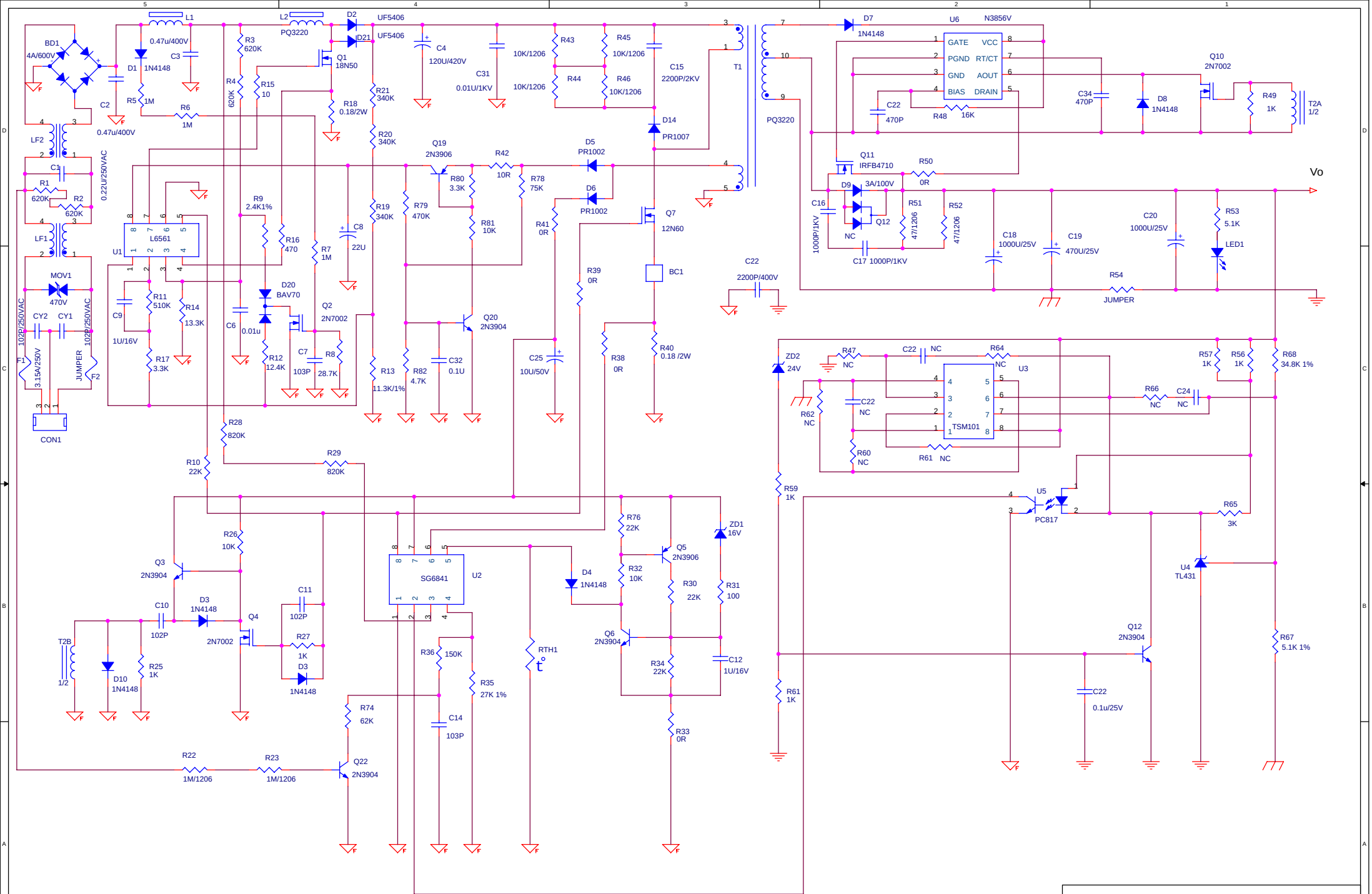

Title		
Size A3	Document Number 19V/6.5A Flyback Synchronous Rectifier Application	Rev A
Date: Thursday, September 18, 2003	Sheet 1 of 1	