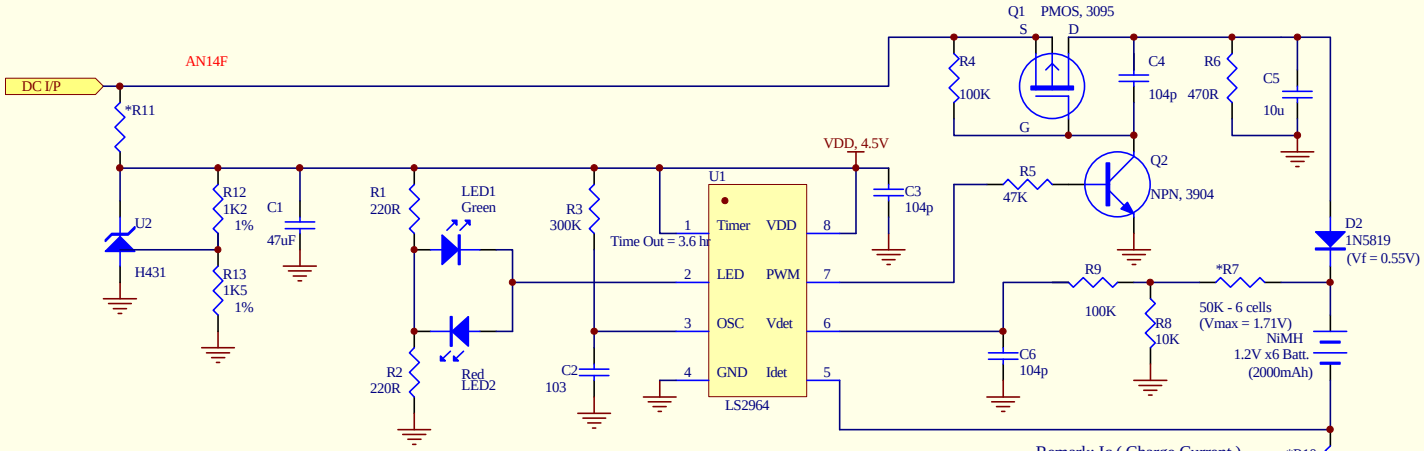

Remark: Ic (Charge Current)
1.) R10 = 0R50, Ic = 600mA
2.) R10 = 0R30, Ic = 1000mA
3.) R10 = 0R25, Ic = 1200mA
4.) R10 = 0R20, Ic = 1500mA

Cells,	DC Input,	R11,	R7
3,	5.5~6.0V,	47R,	20K
4,	7.0~8.0V,	120R,	30K
5,	8.0~10V,	200R,	47K
6,	10~12V,	270R,	50K

Title LS2964 Application circuit		http://www.linkas.com.tw/
Remark: Suggested circuit maybe changed without notice.		
Size A4	Number Multiple Cells	Revision R1.0
Date: 14-Jun-2004	Sheet of 1 of 1	
File: D:\0APP\DTCHAR~1\A14F-64.SCH	Drawn By:	