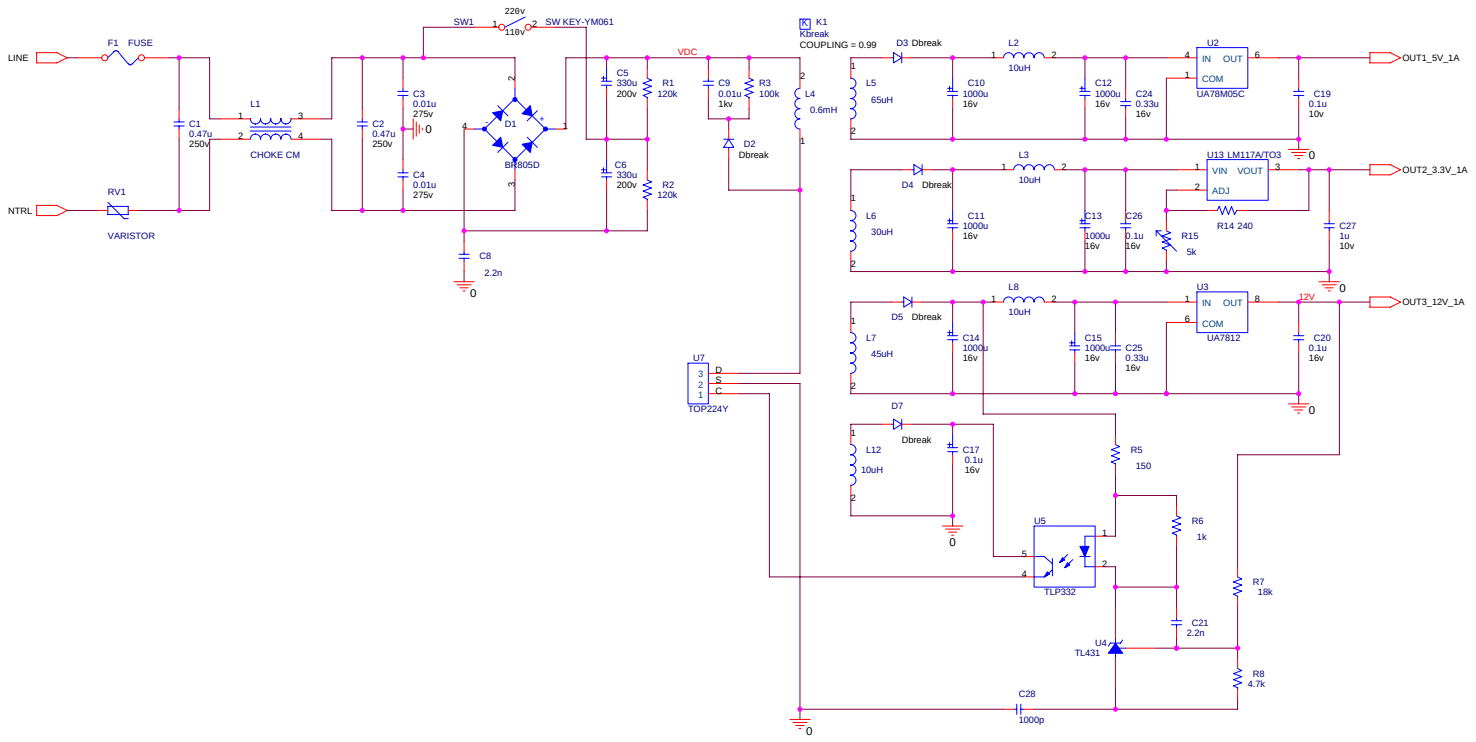

Title	<Title>		
Size B	Document Number <Doc>		Rev <RevCode>
Date: Friday, July 23, 2004		Sheet 1 of 1	