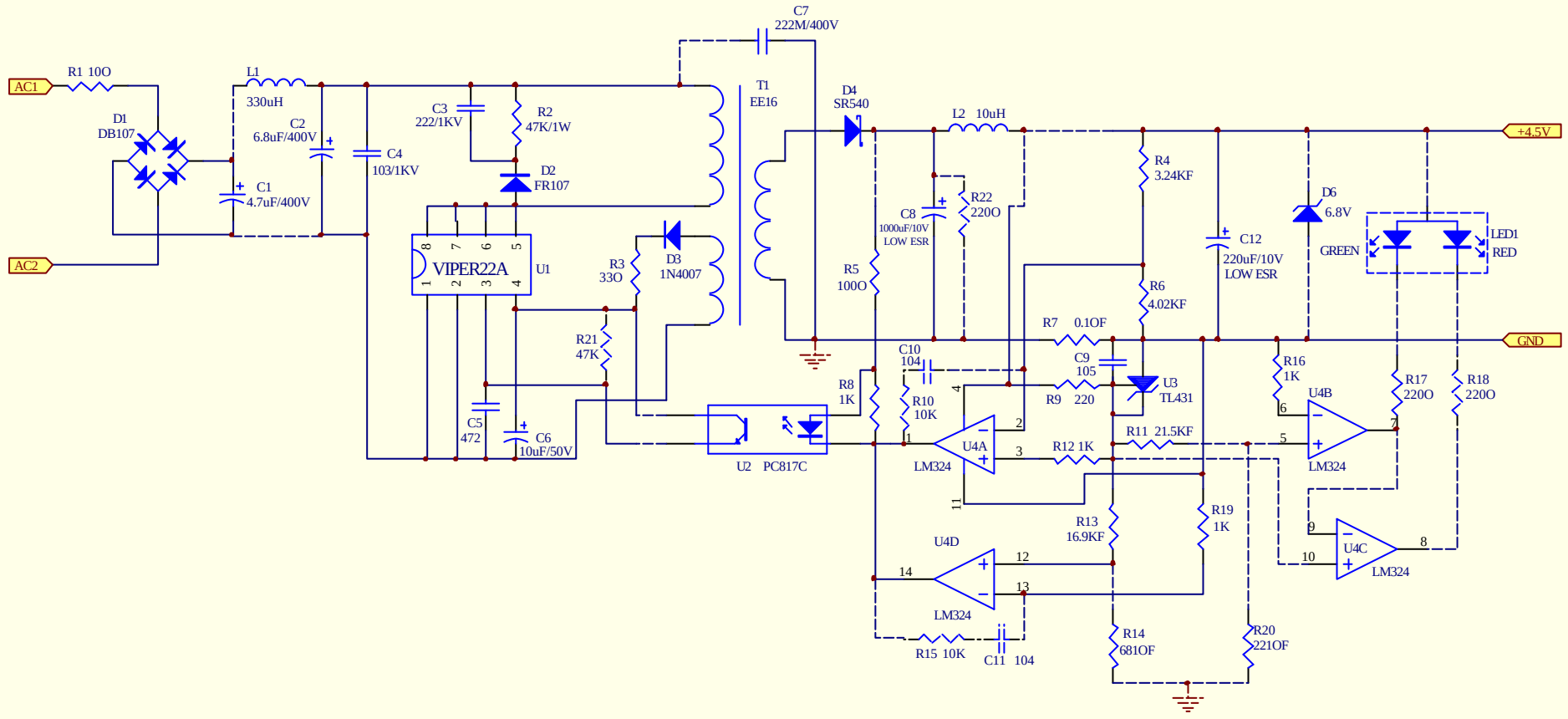


| Title | | |
|---|---|---|
| Size A4 | Number | Revision |
| Date: 6-May-2005 | Sheet of | |
| File: E:\Work\4710充电器(YXPA003)\YXPA003.ddb | Drawn By: | |