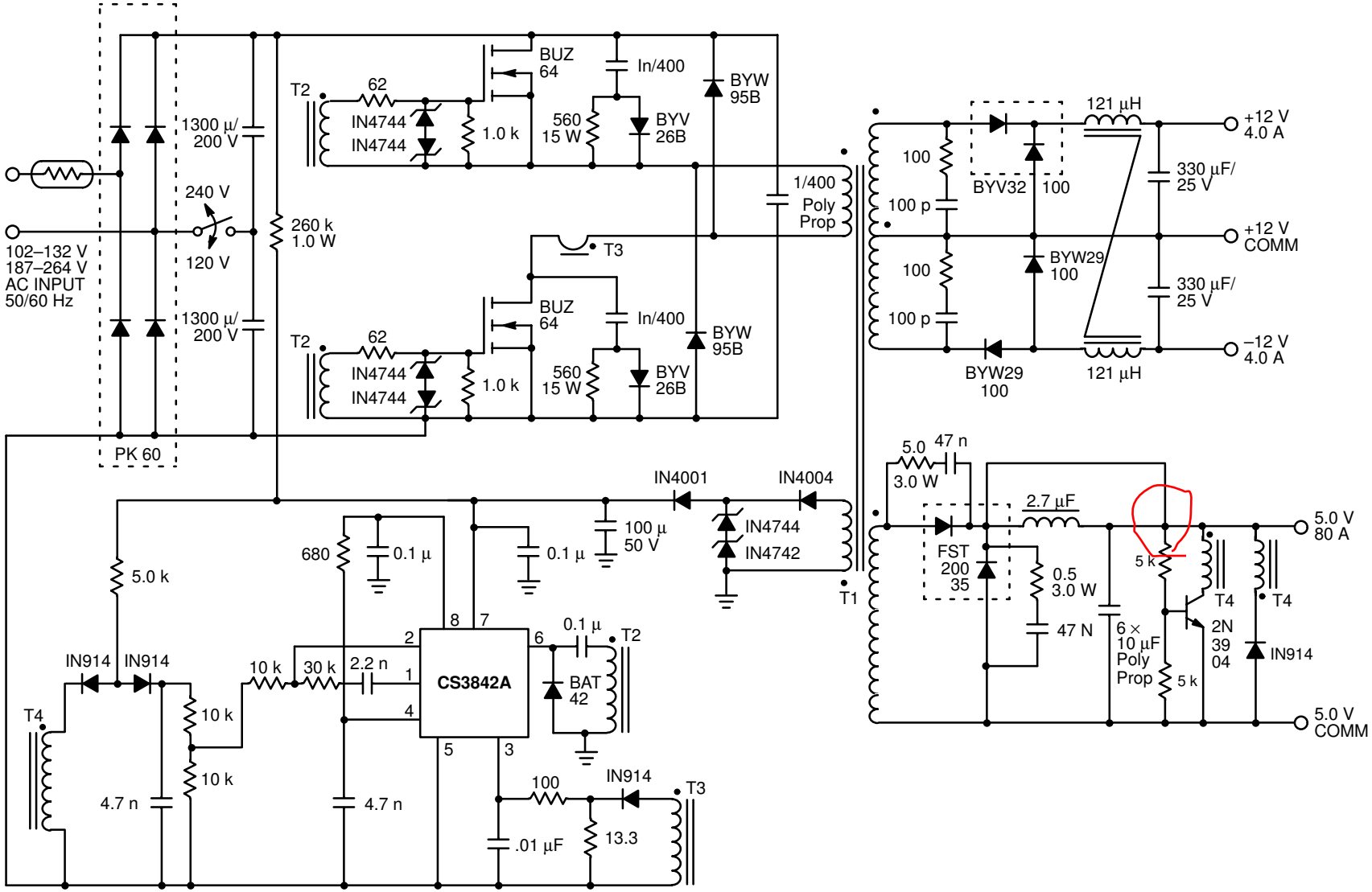

Figure 7. Schematic of 500 W, 200 kHz Power Supply