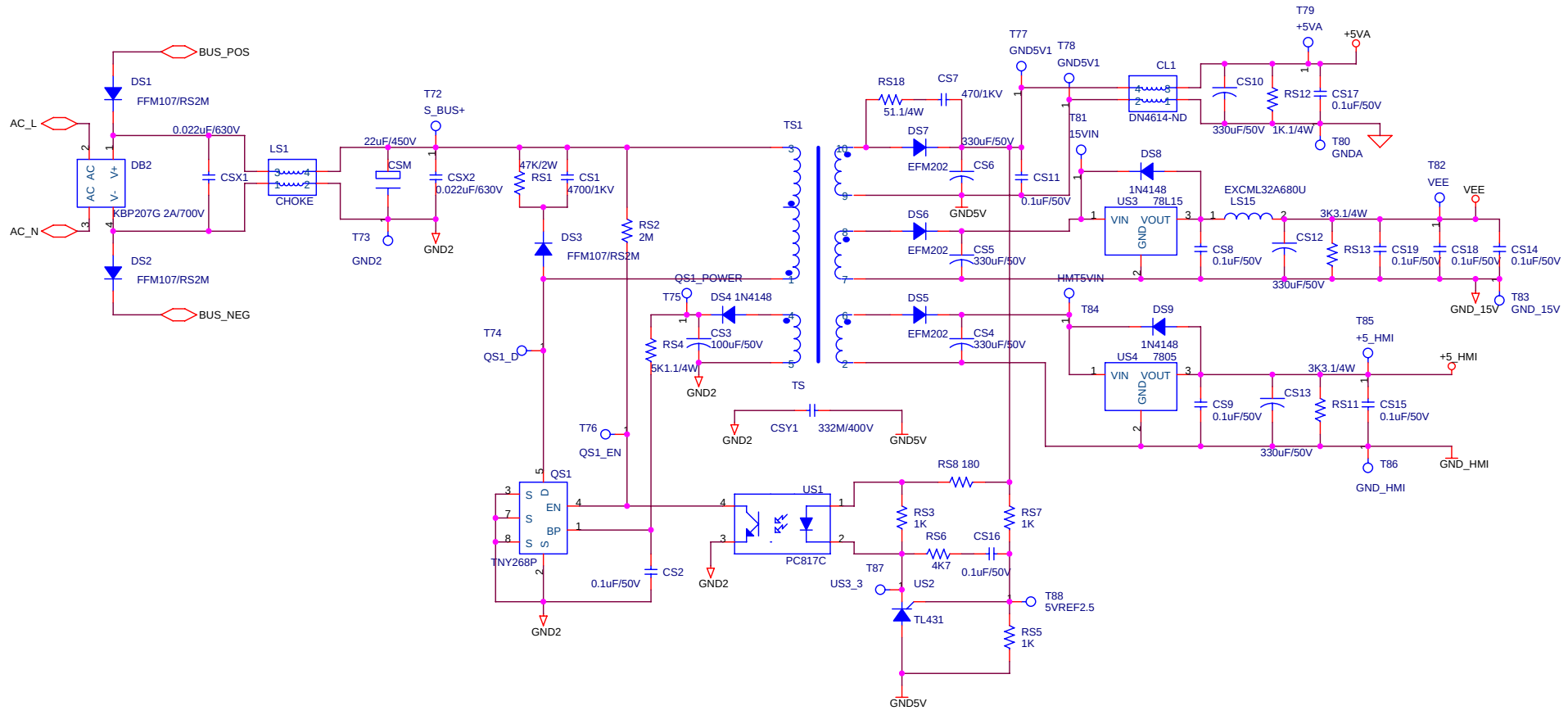

Title	ACB05030A2	
Size B	Document Number POWER3	Rev A.2
Date: Monday, March 14, 2005	Sheet 9 of 9	