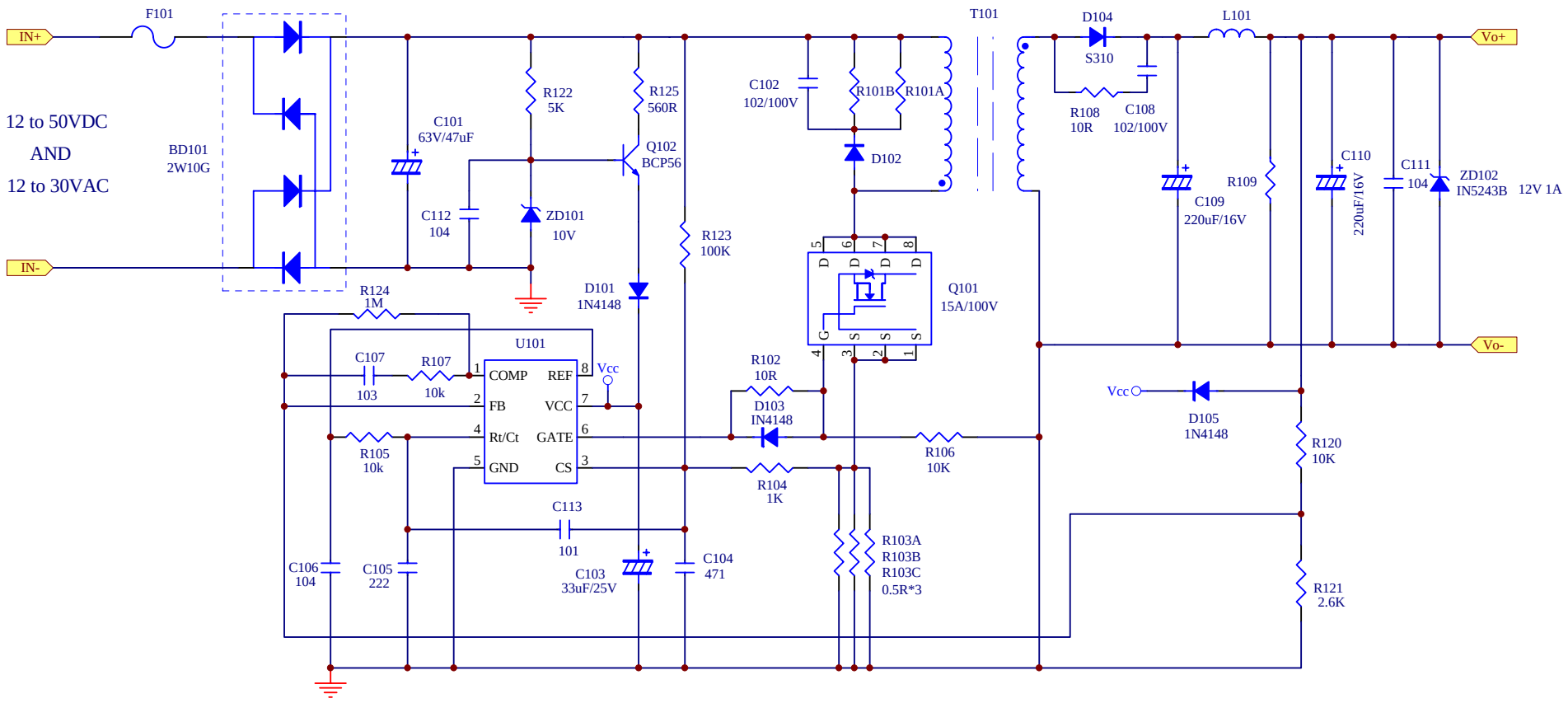
IN+
IN-
F101
12 to 50VDC
AND
12 to 30VAC
BD101
2W10G
C101
63V/47uF
C112
104
R122
5K
ZD101
10V
R125
560R
Q102
BCP56
R123
100K
D101
1N4148
R124
1M
U101
C107
103
R107
10k
COMP
FB
Rt/Ct
GND
REF
VCC
GATE
CS
Vcc
R105
10k
C113
101
C106
104
C105
222
C103
33uF/25V
C104
471
C102
102/100V
R101B
R101A
D102
Q101
15A/100V
R102
10R
D103
IN4148
R104
1K
R106
10K
R103A
R103B
R103C
0.5R*3
T101
D104
S310
R108
10R
C108
102/100V
L101
C109
220uF/16V
R109
C110
220uF/16V
C111
104
ZD102
IN5243B
12V 1A
Vo+
Vo-
D105
1N4148
R120
10K
R121
2.6K