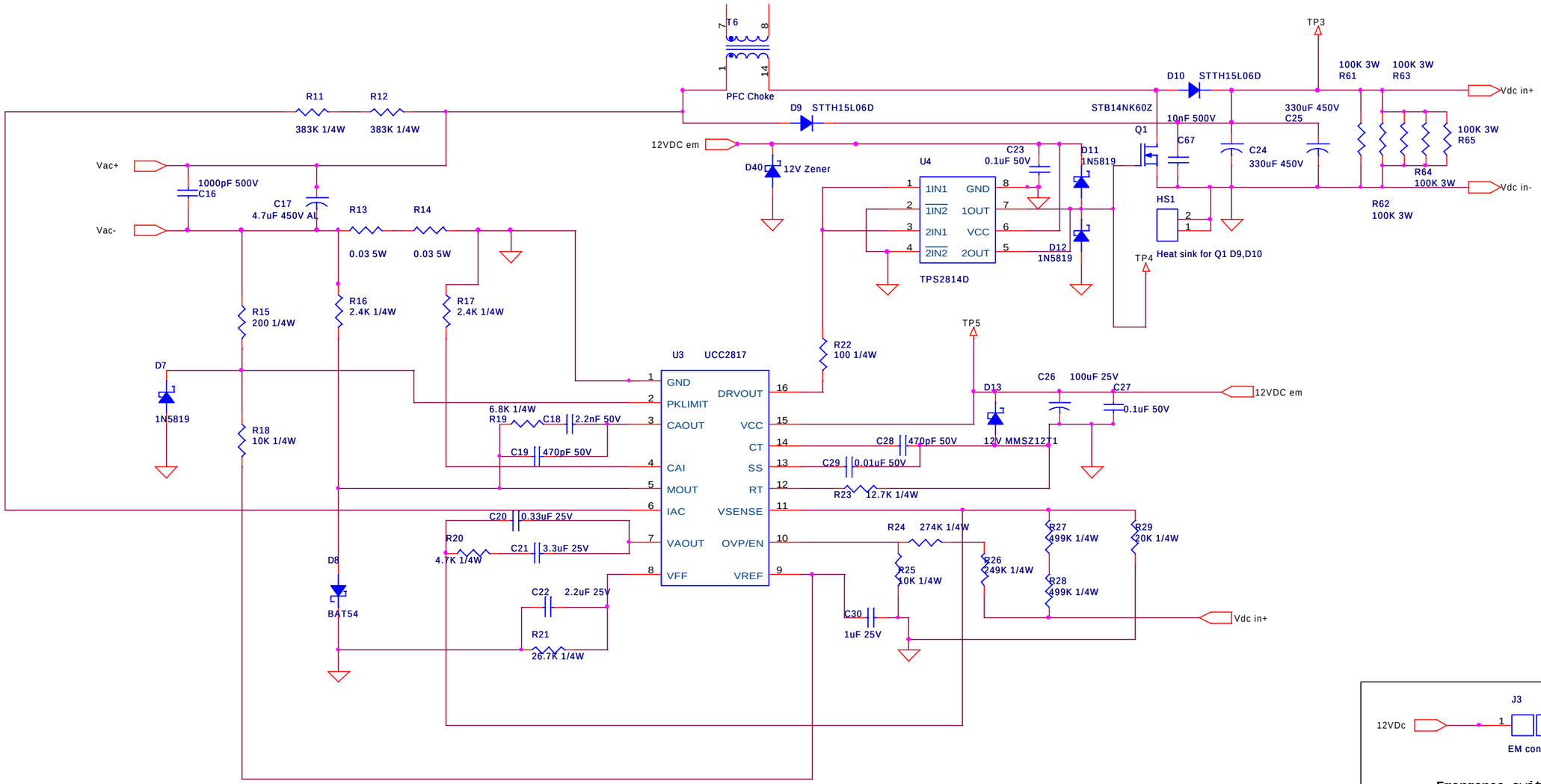

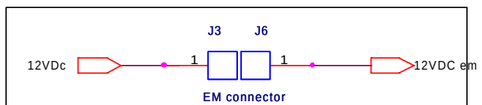

Emergence switch circuit

Normally, J3 and J6 is connection by embergence key. It will be open when end user press emergence switch. It open power supply for current source.

Title	PFC	
Size	Document Number **DRR-POWER**	Rev 1.1
Date: Friday, May 13, 2005	Sheet 1 of 3	