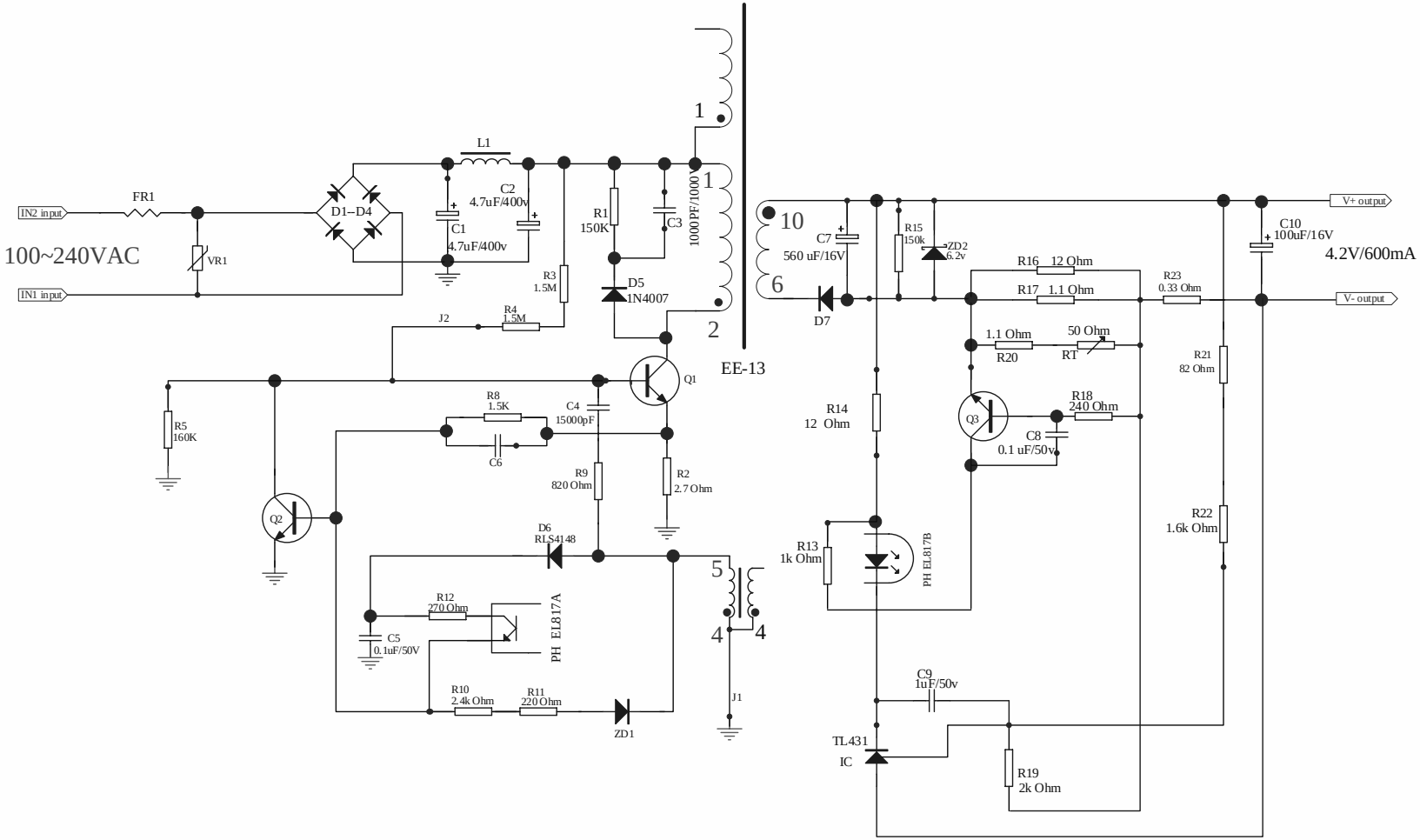

Title		
Size A3	Number	Revision REV.1
Date: 2005/8/22	Sheet of	
File: C:\Documents and Settings\..\ev_value.SCH	Drawn By:	