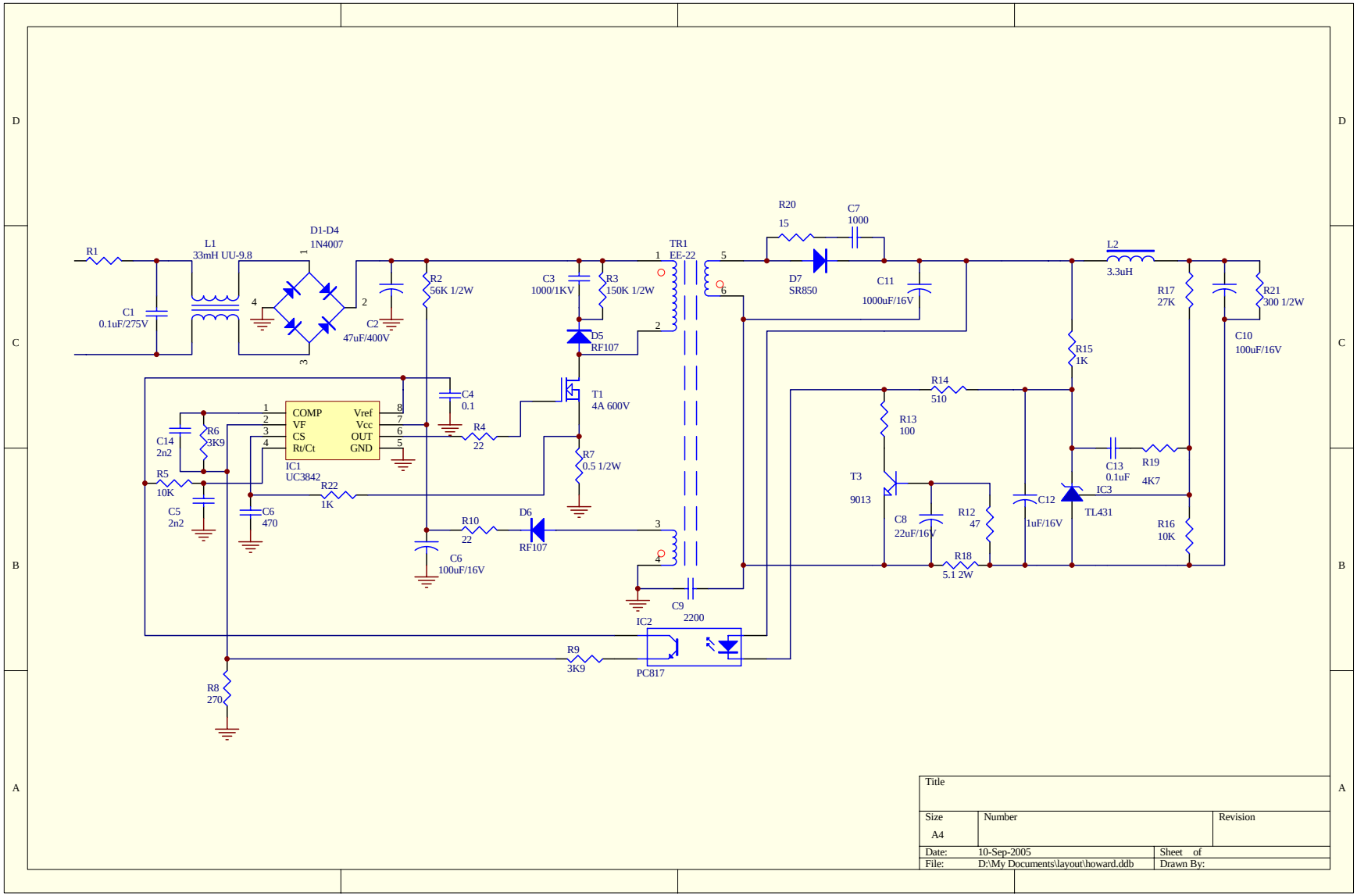
R1
C1
0.1uF/275V
L1
33mH UU-9.8
D1-D4
1N4007
C2
47uF/400V
R2
56K 1/2W
C3
1000/1KV
R3
150K 1/2W
D5
RF107
TR1
EE-22
R20
15
C7
1000
D7
SR850
C11
1000uF/16V
L2
3.3uH
R17
27K
R21
300 1/2W
C10
100uF/16V
R15
1K
C4
0.1
T1
4A 600V
COMP
VF
CS
Rt/Ct
Vref
Vcc
OUT
GND
IC1
UC3842
R4
22
R7
0.5 1/2W
C14
2n2
R6
3K9
R5
10K
C5
2n2
R22
1K
C6
470
R10
22
D6
RF107
C6
100uF/16V
C9
2200
IC2
PC817
R9
3K9
R8
270
R14
510
R13
100
T3
9013
C8
22uF/16V
R12
47
R18
5.1 2W
C12
1uF/16V
C13
0.1uF
R19
4K7
IC3
TL431
R16
10K
Title
Size
A4
Number
Revision
Date:
10-Sep-2005
Sheet of
File:
D:\My Documents\layout\howard.ddb
Drawn By: