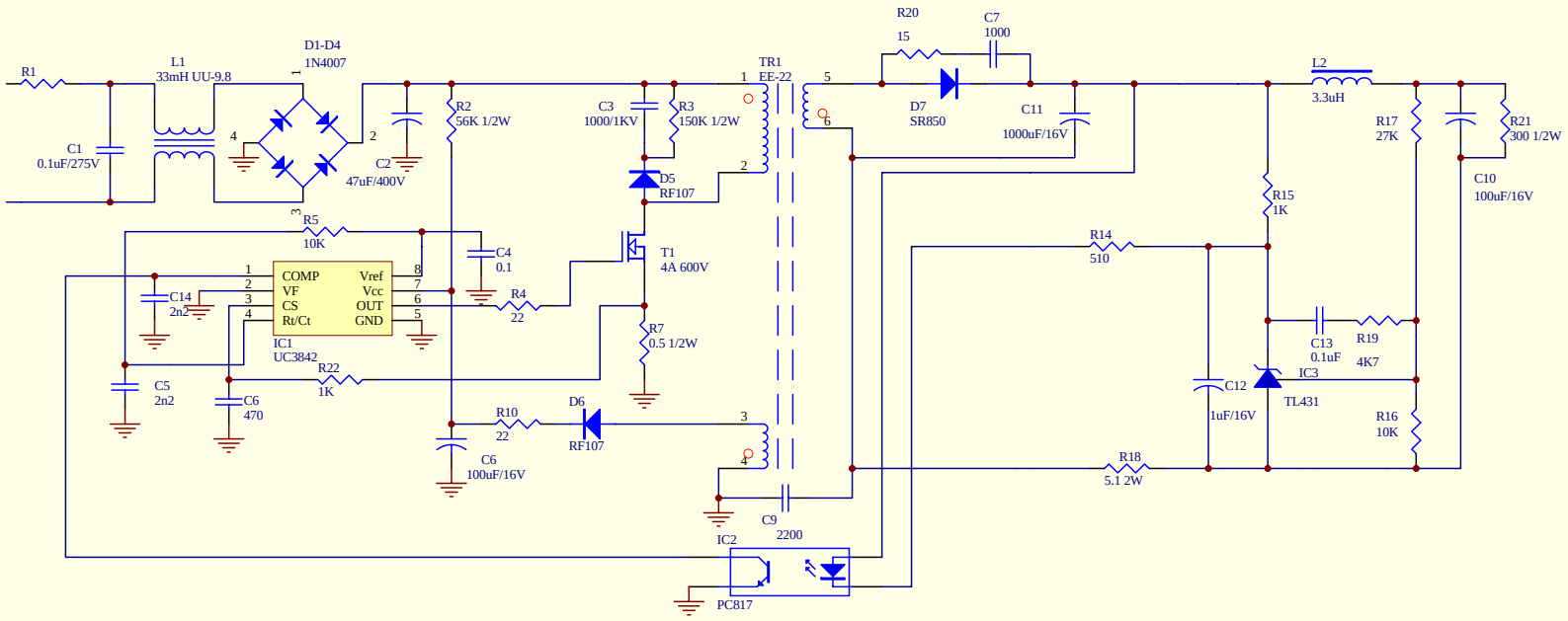

Title		
Size A4	Number	Revision
Date: 17-Sep-2005		Sheet of
File: D:\My Documents\layout\howard.ddb		Drawn By: