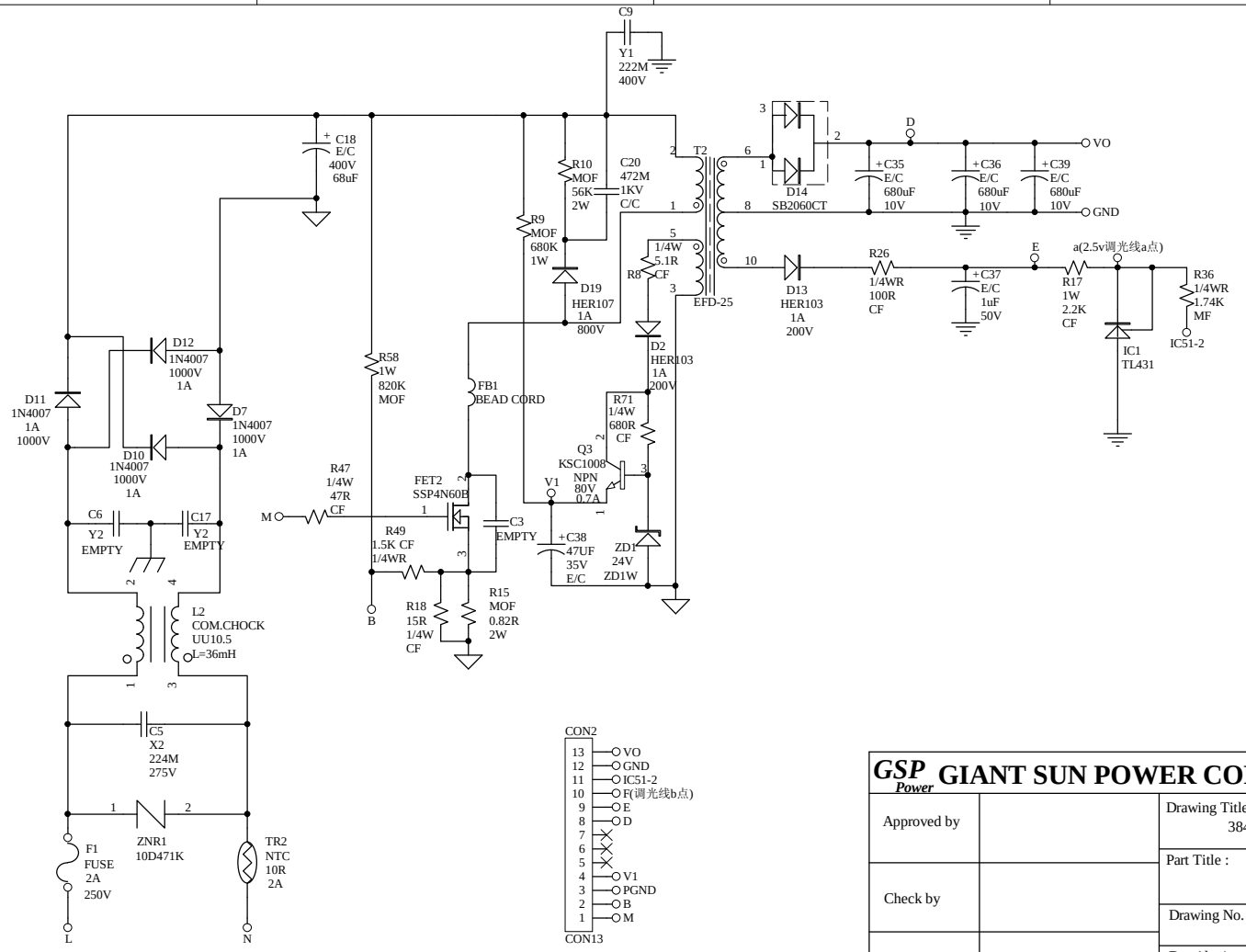

GSP Power GIANT SUN POWER CORPORATION

Approved by		Drawing Title : 3843版6V/20W（大板）	
Check by		Part Title :	
		Drawing No.	Rev.
Drawn by		Date(day/month/year) 05 . 09. 6	