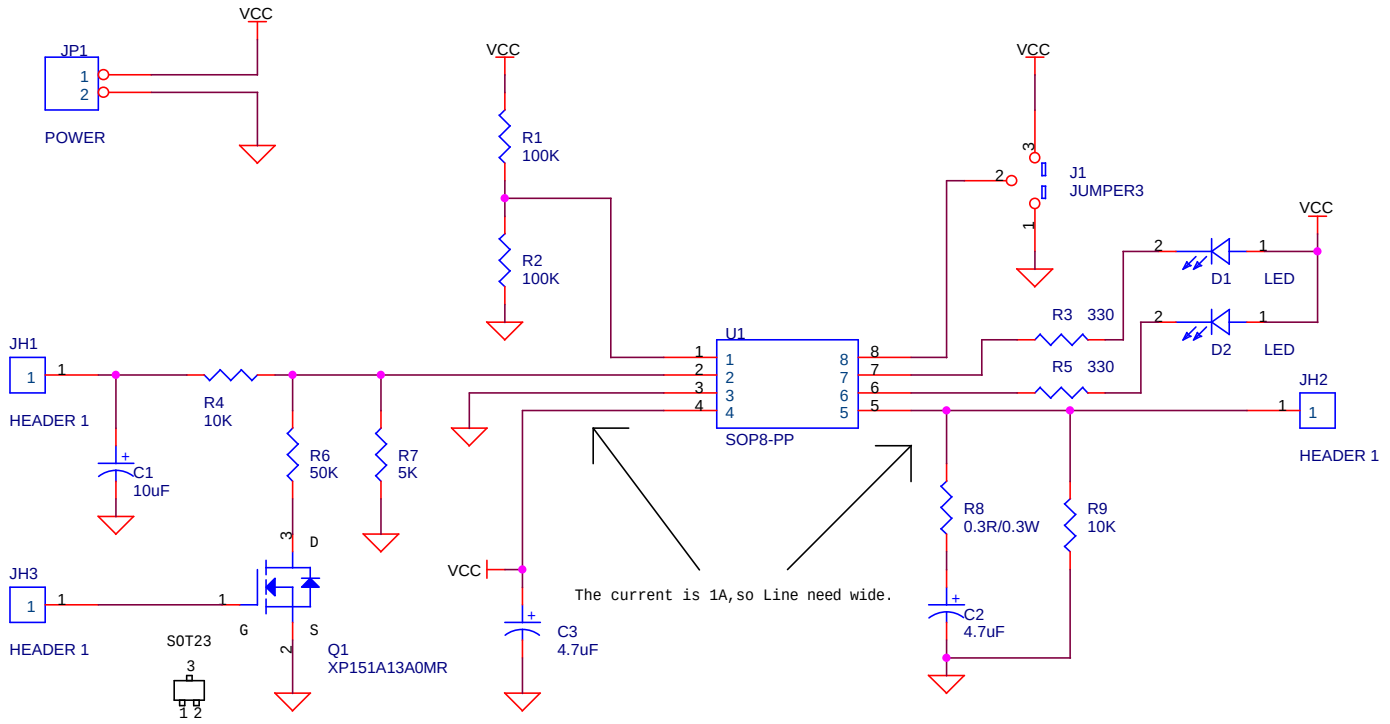

Title	DEMO BOARD V1.0	
Size	Document Number	Rev 1.0
Date: Friday, September 23, 2005	Sheet 1 of 1	