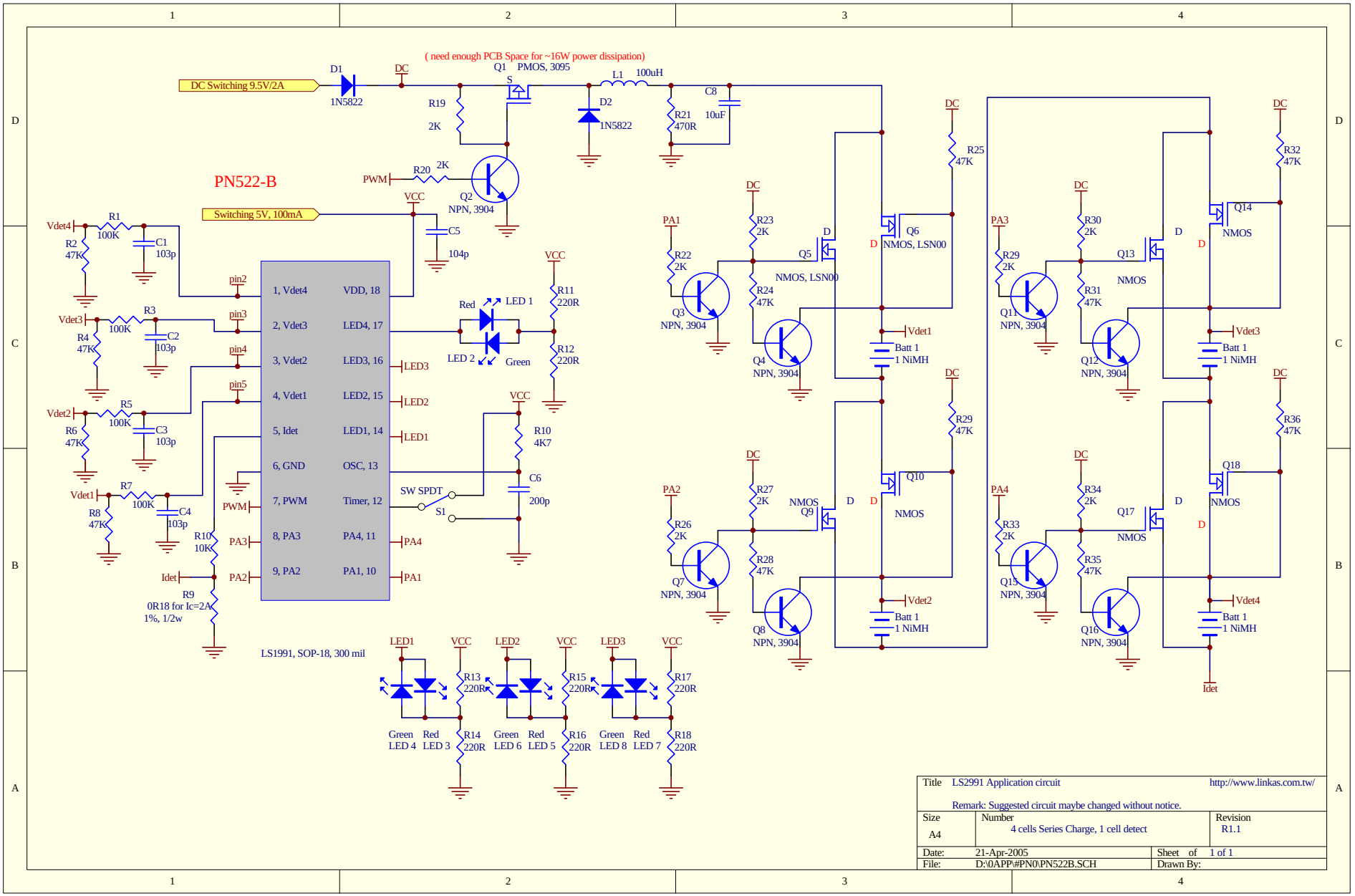

Title LS2991 Application circuit		http://www.linkas.com.tw/
Remark: Suggested circuit maybe changed without notice.		
Size A4	Number 4 cells Series Charge, 1 cell detect	Revision R1.1
Date: 21-Apr-2005	Sheet of 1 of 1	
File: D:\0APP\#PN0\PN522B.SCH	Drawn By:	