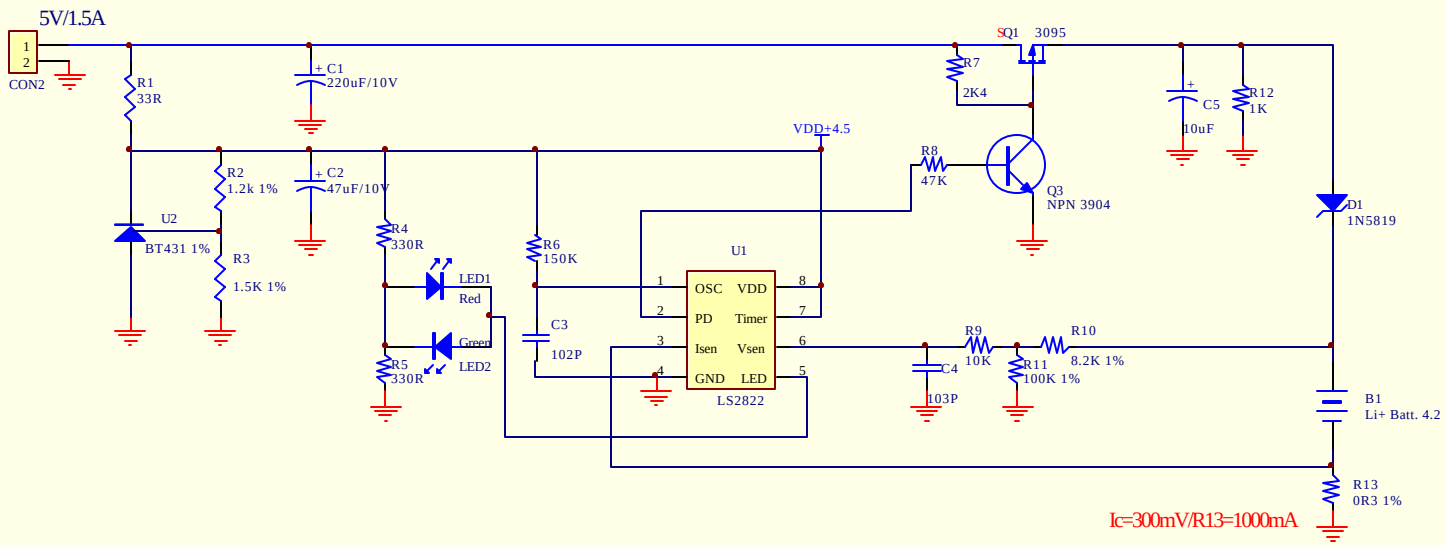

Title	LS2822 Application circuit for 1cell Li+	
Size A4	Number KAS	Revision
Date: 25-Oct-2005	Sheet of	
File: E:\Mycircuit\LS2822\LS2822-9V.DDB	Drawn By:	