POWER 12V5A.sch-1 - Fri Nov 04 18:22:22 2005

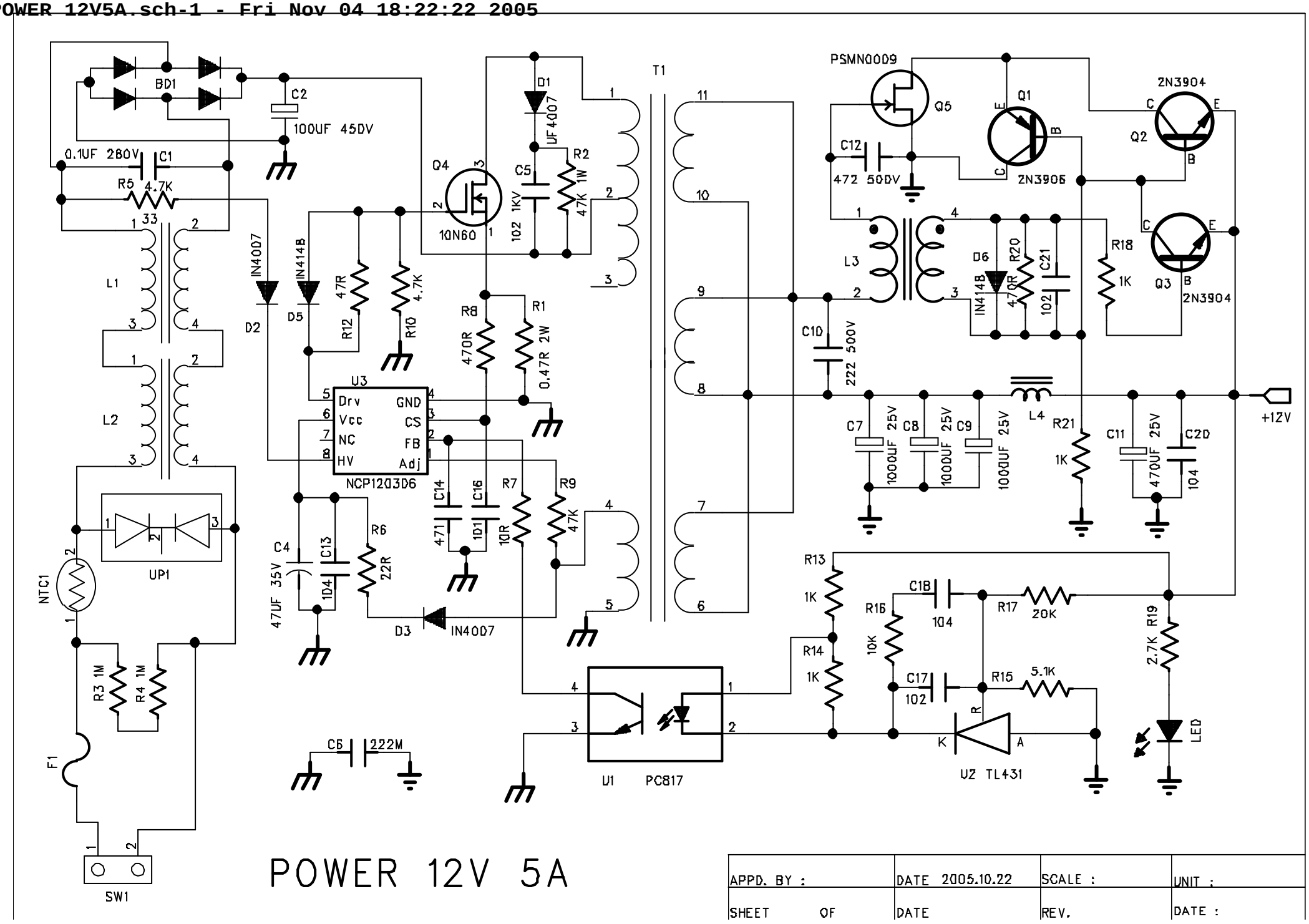

POWER 12V 5A

APPD. BY :	DATE 2005.10.22	SCALE :	UNIT :
SHEET OF	DATE	REV.	DATE :