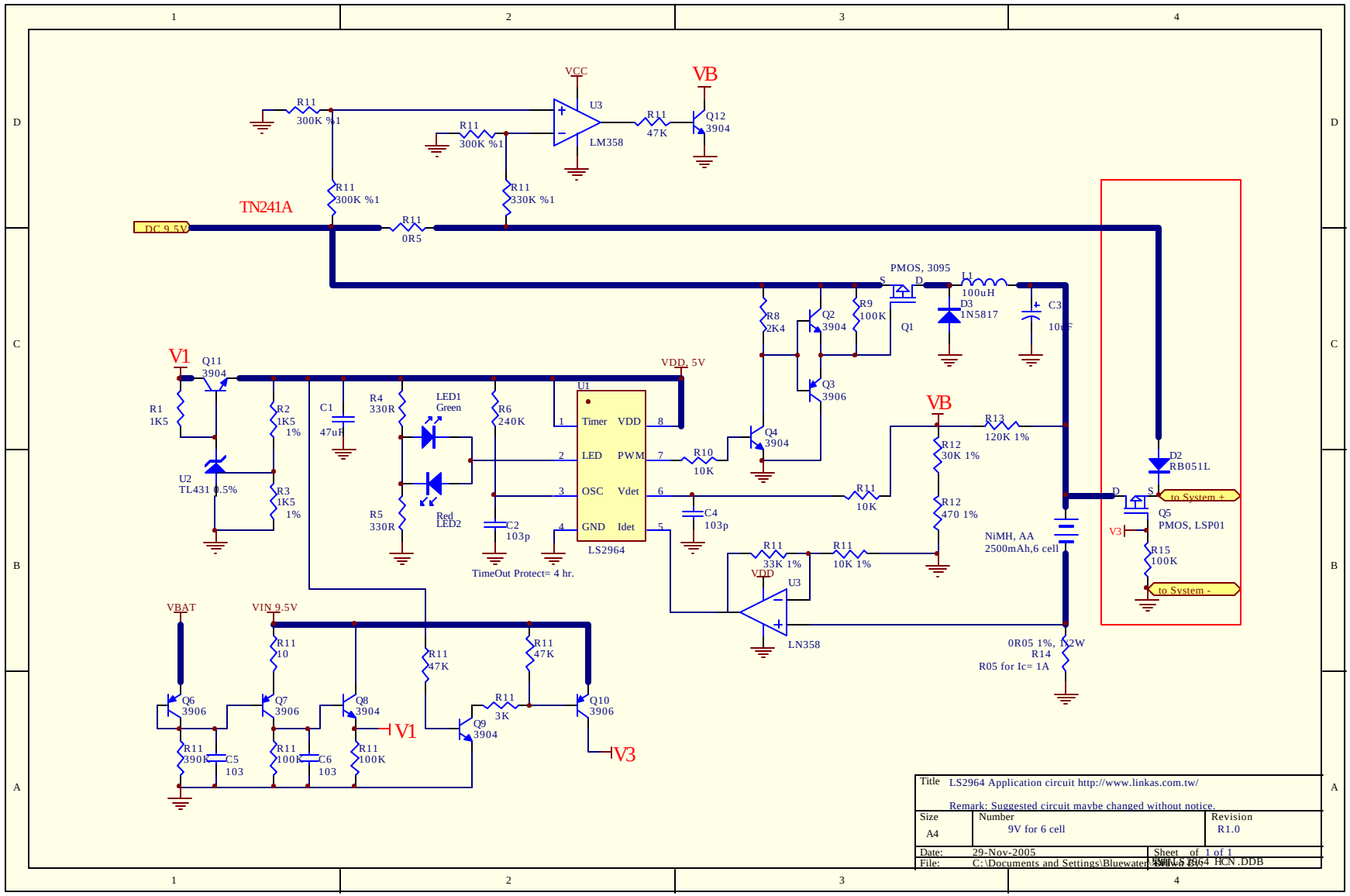

Title	LS2964 Application circuit http://www.linkas.com.tw/ Remark: Suggested circuit maybe changed without notice.	
Size A4	Number 9V for 6 cell	Revision R1.0
Date: 29-Nov-2005		Sheet of 1 of 1
File: C:\Documents and Settings\Bluewater\桌面\LS2964 HCN .DDB		