INTELLIGENT COMPONENTS TECHNOLOGY ZHUHAI LTD.(CHINA)

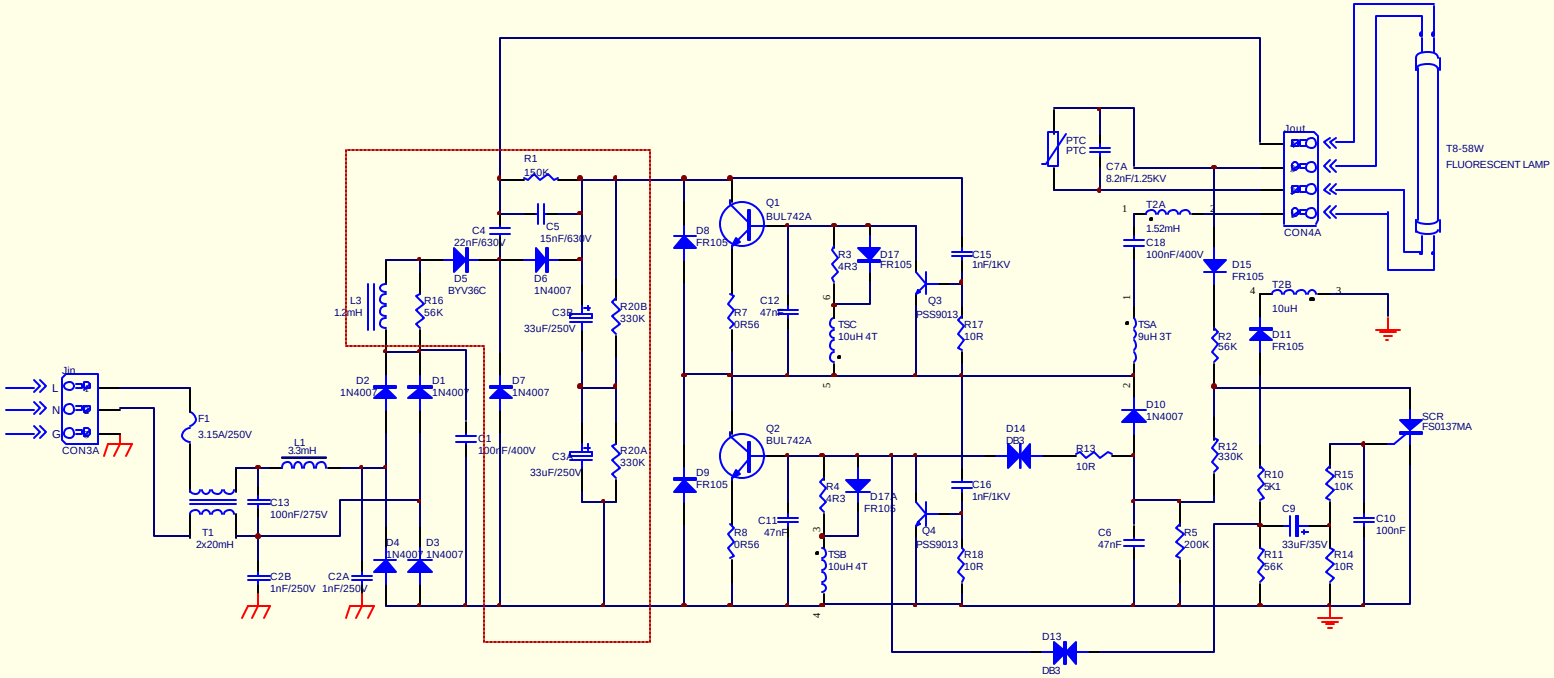

Title FBA158 Ballast Schematic			Part No. ICT-CEB06-001	Page	1/1
Approved	Check	Drawn	Dep. LABORATORY	Rev.	A0
Zhen	AJ Chen	Billy Gui	Scale 1:1	Date	Feb. 7 2006

ICT