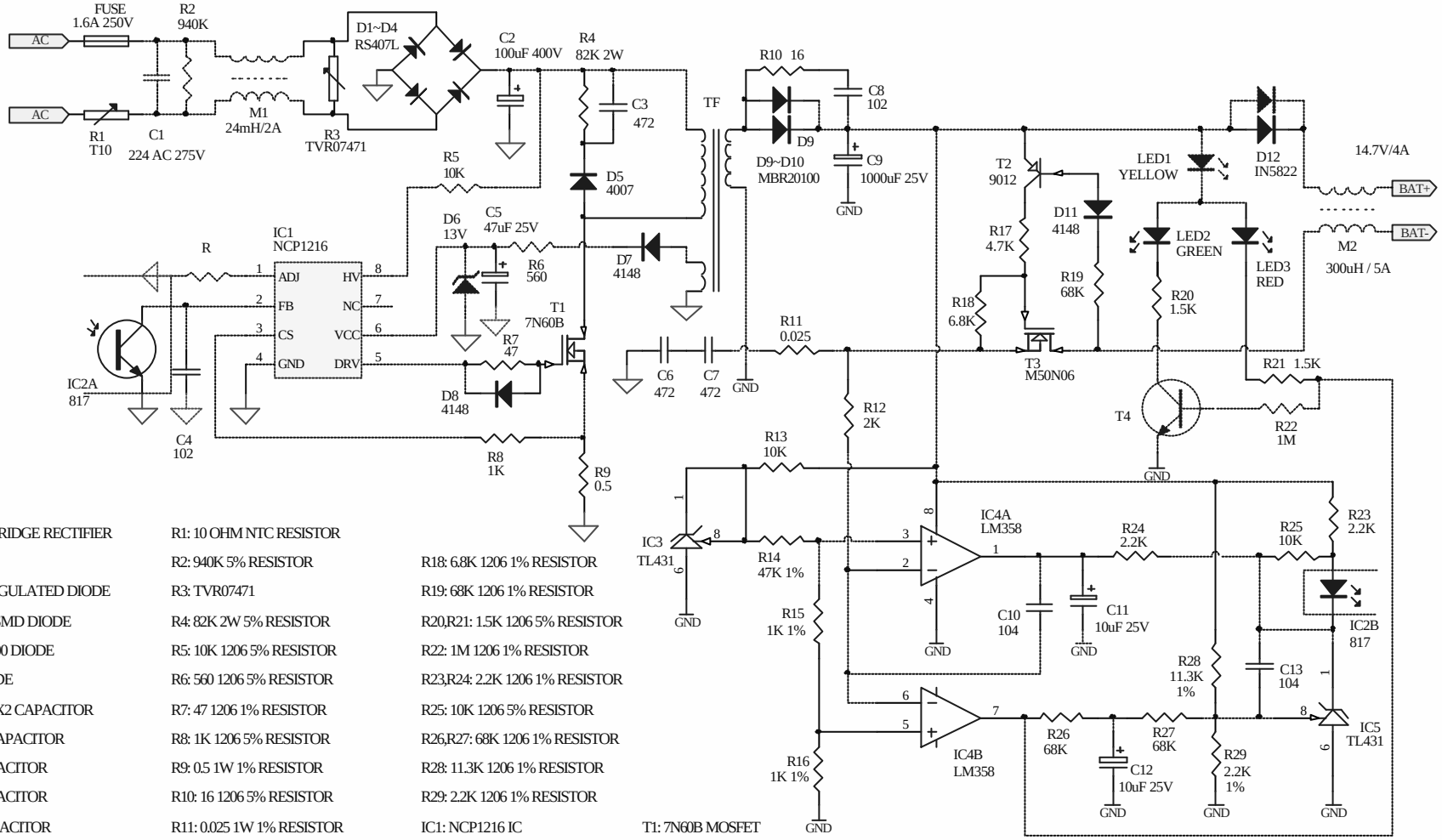

D1~D4: RS407L BRIDGE RECTIFIER	R1: 10 OHM NTC RESISTOR		
D5: 4007 DIODE	R2: 940K 5% RESISTOR	R18: 6.8K 1206 1% RESISTOR	
D6: 13V SMD REGULATED DIODE	R3: TVR07471	R19: 68K 1206 1% RESISTOR	
D7,D8,D11: 4148 SMD DIODE	R4: 82K 2W 5% RESISTOR	R20,R21: 1.5K 1206 5% RESISTOR	
D9,D10: MBR20100 DIODE	R5: 10K 1206 5% RESISTOR	R22: 1M 1206 1% RESISTOR	
D12: IN5822 DIODE	R6: 560 1206 5% RESISTOR	R23,R24: 2.2K 1206 1% RESISTOR	
C1: 224 AC 275V X2 CAPACITOR	R7: 47 1206 1% RESISTOR	R25: 10K 1206 5% RESISTOR	
C2: 100uF 400V CAPACITOR	R8: 1K 1206 5% RESISTOR	R26,R27: 68K 1206 1% RESISTOR	
C3: 472 1KV CAPACITOR	R9: 0.5 1W 1% RESISTOR	R28: 11.3K 1206 1% RESISTOR	
C4: 102 0805 CAPACITOR	R10: 16 1206 5% RESISTOR	R29: 2.2K 1206 1% RESISTOR	
C5: 47uF 25V CAPACITOR	R11: 0.025 1W 1% RESISTOR	IC1: NCP1216 IC	T1: 7N60B MOSFET
C6,C7: 472 250V Y2 CAPACITOR	R12: 2K 1206 1% RESISTOR	IC2: 817 IC	T2: 9012 TRIODE
C8: 102 0805 CAPACITOR	R13: 10K 1206 5% RESISTOR	IC3,IC5: TL431 IC	T3: M50N06 MOSFET
C9: 1000uF 25V CAPACITOR	R14: 47K 1206 1% RESISTOR	IC4: LM358 IC	T4: 9013 TRIODE
C10: 104 0805 CAPACITOR	R15: 1K 1206 1% RESISTOR	LED1: 5mm YELLOW LED	TF: AN10004N TRANSFORMER
C11,C12: 10uF 35V CAPACITOR	R16: 1K 1206 1% RESISTOR	LED2: 5mm GREEN LED	M1: 24mH 2A COMMON INDUCTOR
C13: 104 SMD CAPACITOR	R17: 4.7K 1206 1% RESISTOR	LED3: 5mm RED LED	M2: 300uH 5A COMMON INDUCTOR

Title	AN23604	
Size A4	Number	Revision
Date: 2006-3-14	Sheet of	
File: C:\My Documents\AN23604.SCH	Drawn By: Liu Shankui	