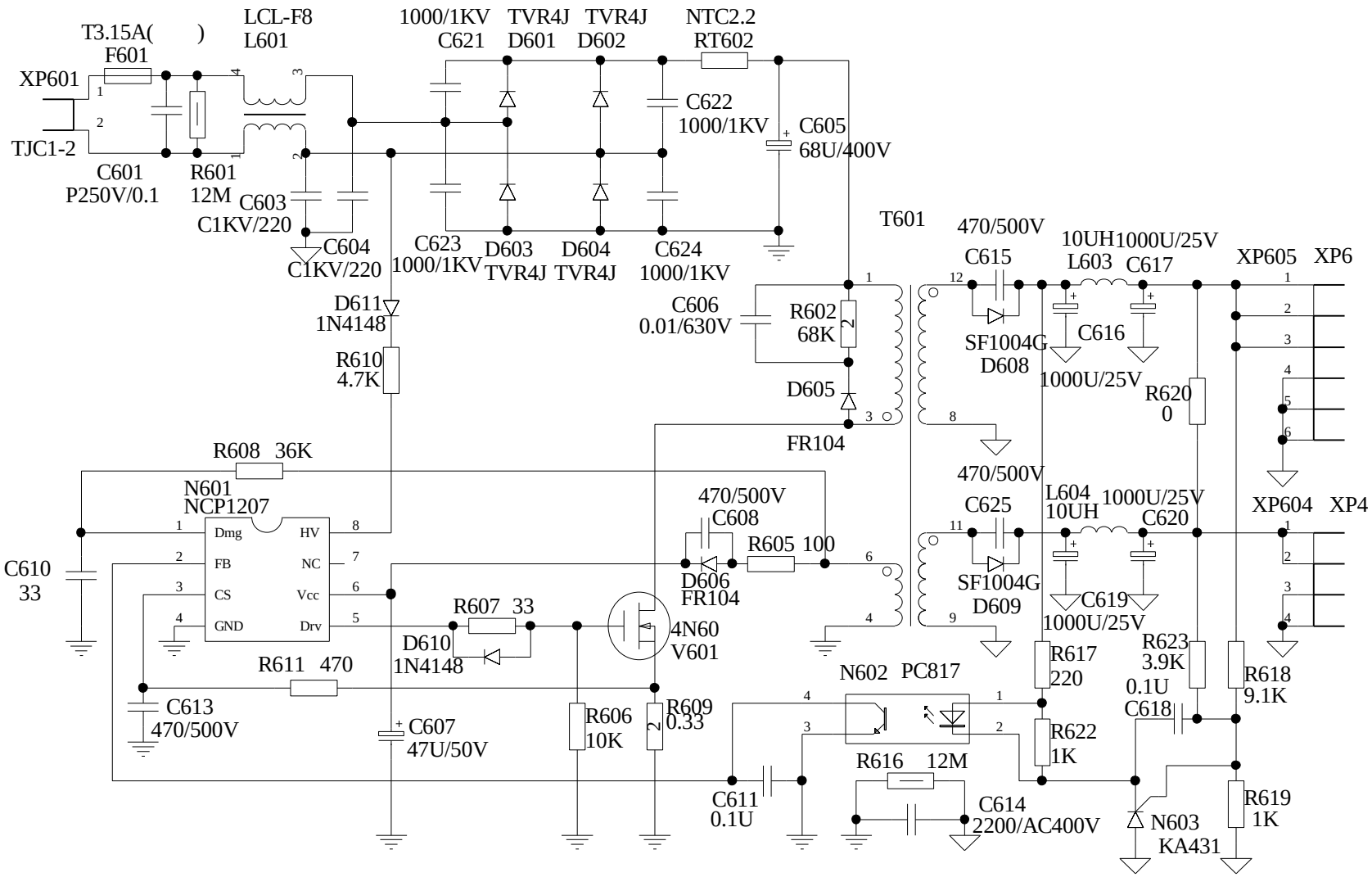

soyea technology
sunnychan

Title		
Size A4	Number	Revision
Date: 13-Mar-2006		Sheet of
File: E:\ \cd60w.DDB		Drawn By:

Create PDF with GO2PDF for free, if you wish to remove this line, click here to buy Virtual PDF Printer