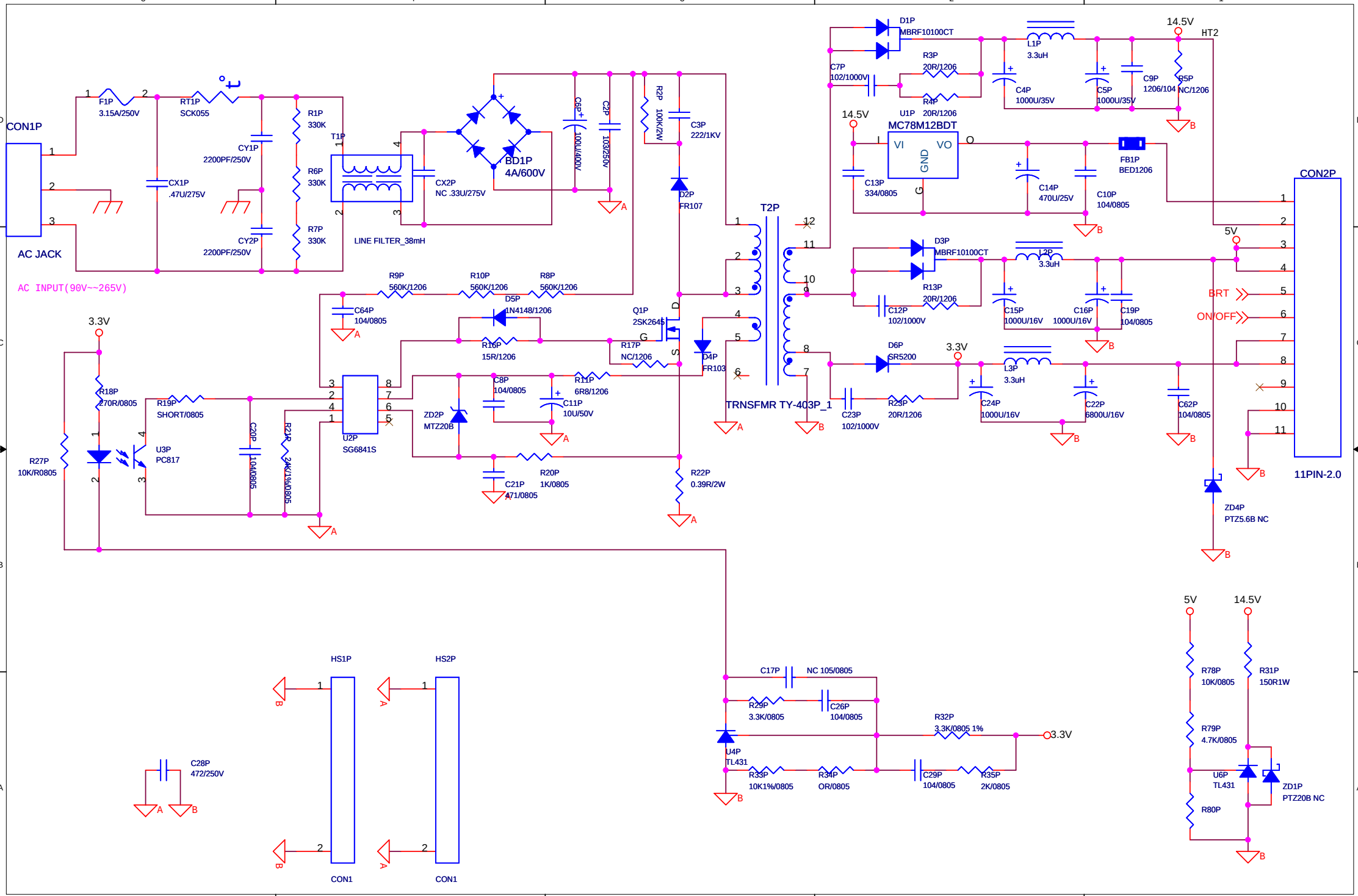
CON1P
AC JACK
AC INPUT(90V~~265V)
F1P
3.15A/250V
RT1P
SCK055
CX1P
.47U/275V
CY1P
2200PF/250V
CY2P
2200PF/250V
R1P
330K
R6P
330K
R7P
330K
T1P
LINE FILTER_38mH
CX2P
NC .33U/275V
BD1P
4A/600V
C6P
100U/400V
C2P
103/250V
R2P
100K/2W
C3P
222/1KV
D2P
FR107
T2P
TRNSFMR TY-403P_1
D1P
MBRF10100CT
C7P
102/1000V
R3P
20R/1206
R4P
20R/1206
L1P
3.3uH
C4P
1000U/35V
C5P
1000U/35V
C9P
1206/104
R5P
NC/1206
14.5V
HT2
U1P
MC78M12BDT
VI
VO
GND
C13P
334/0805
C14P
470U/25V
C10P
104/0805
FB1P
BED1206
D3P
MBRF10100CT
L2P
3.3uH
R13P
20R/1206
C12P
102/1000V
C15P
1000U/16V
C16P
1000U/16V
C19P
104/0805
D6P
SR5200
3.3V
L3P
3.3uH
C23P
102/1000V
R23P
20R/1206
C24P
1000U/16V
C22P
6800U/16V
C62P
104/0805
5V
CON2P
11PIN-2.0
BRT
ON/OFF
ZD4P
PTZ5.6B NC
R9P
560K/1206
R10P
560K/1206
R8P
560K/1206
C64P
104/0805
D5P
1N4148/1206
R16P
15R/1206
Q1P
2SK2645
R17P
NC/1206
D4P
FR103
C8P
104/0805
R11P
6R8/1206
C11P
10U/50V
ZD2P
MTZ20B
C21P
471/0805
R20P
1K/0805
R22P
0.39R/2W
U2P
SG6841S
R18P
270R/0805
R19P
SHORT/0805
U3P
PC817
C20P
104/0805
R21P
24K/1%/0805
R27P
10K/R0805
HS1P
HS2P
CON1
CON1
C28P
472/250V
C17P
NC 105/0805
R29P
3.3K/0805
C26P
104/0805
U4P
TL431
R33P
10K1%/0805
R34P
OR/0805
R32P
3.3K/0805 1%
C29P
104/0805
R35P
2K/0805
R78P
10K/0805
R31P
150R1W
R79P
4.7K/0805
U6P
TL431
ZD1P
PTZ20B NC
R80P