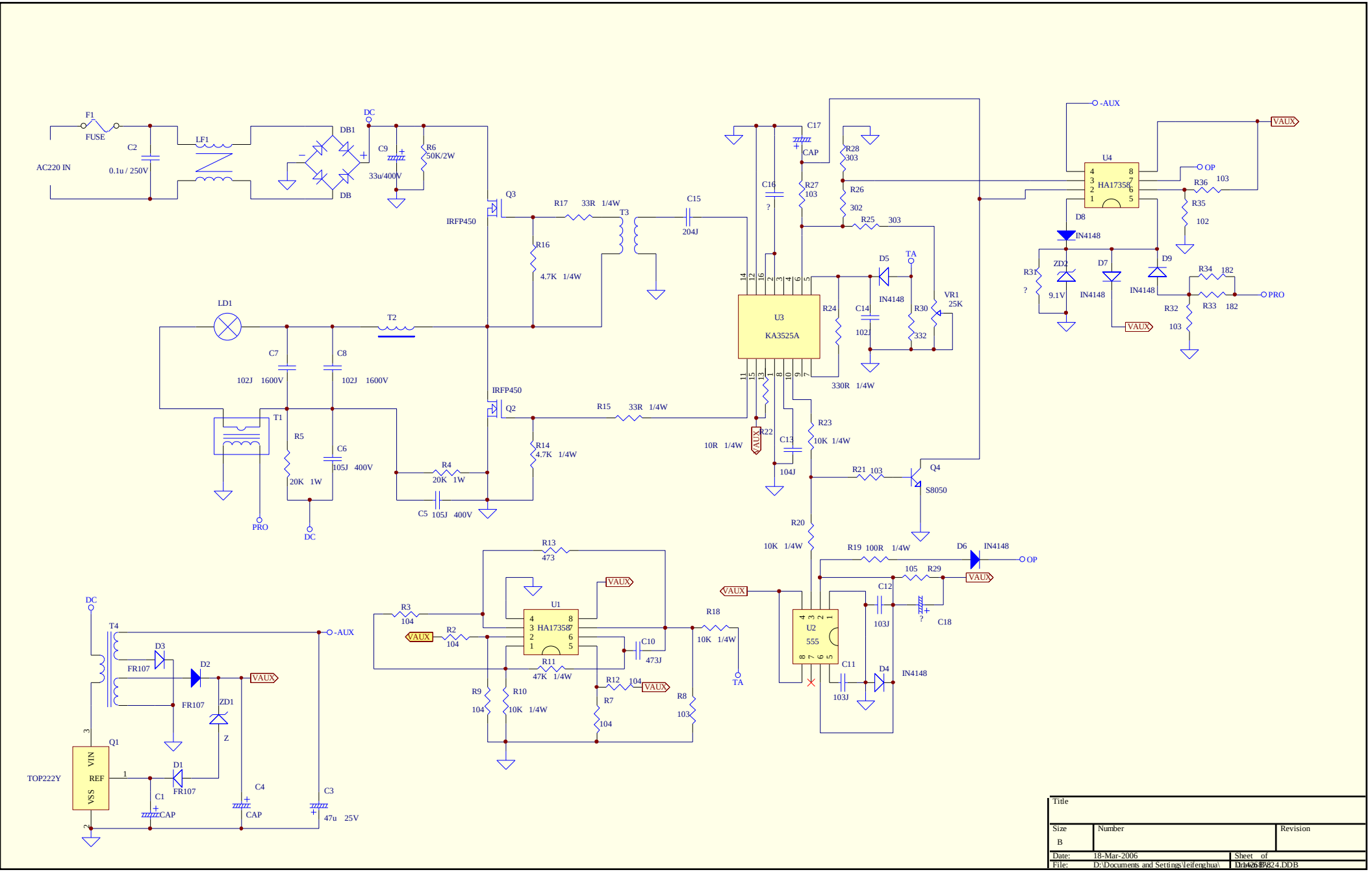

Title		
Size B	Number	Revision
Date: 18-Mar-2006	Sheet of	
File: D:\Documents and Settings\leifenghua\	Drawn by:	