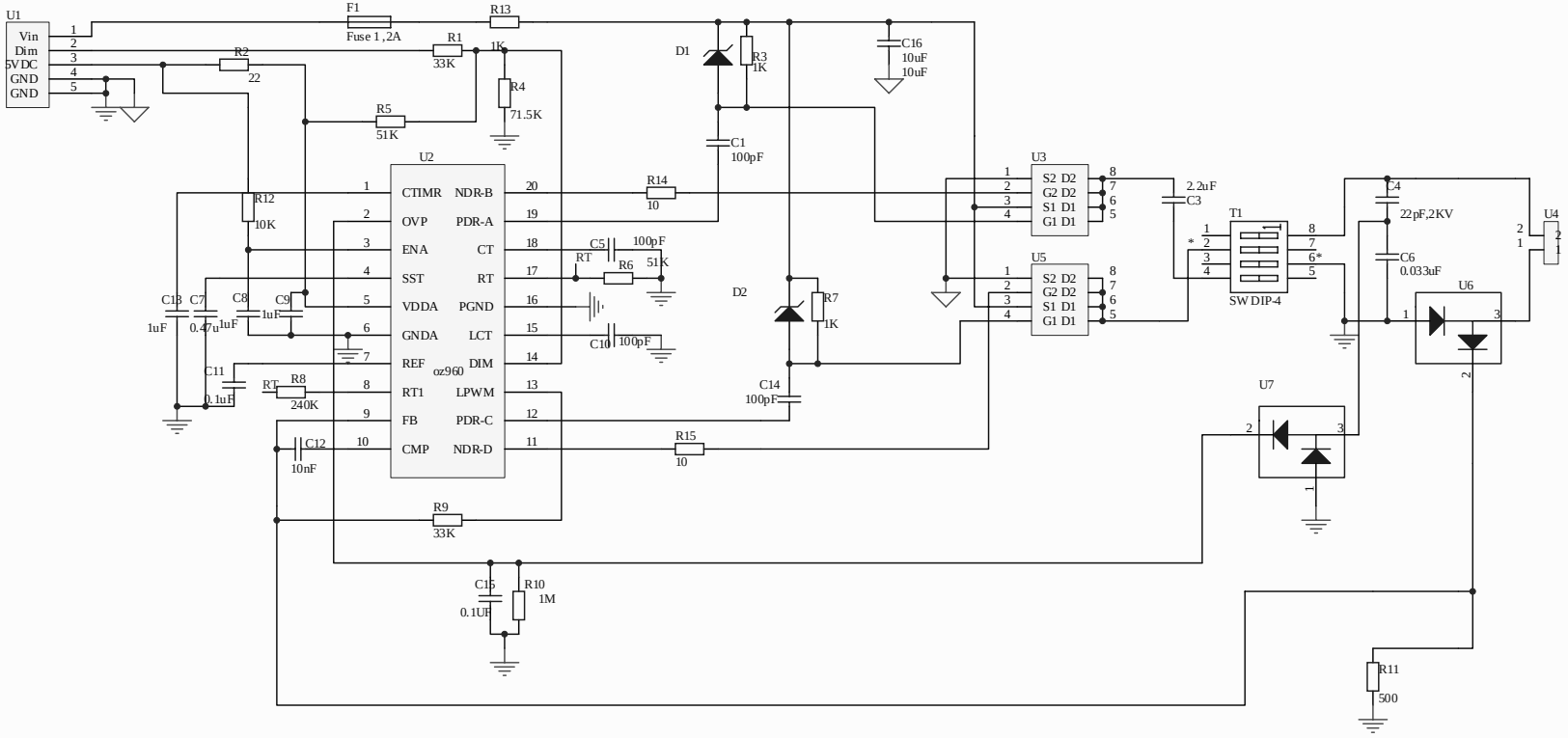

Title		
Size B	Number	Revision
Date: 2006-5-9		Sheet of
File: E:\OZ960\OZ960.SchDoc		Drawn By: