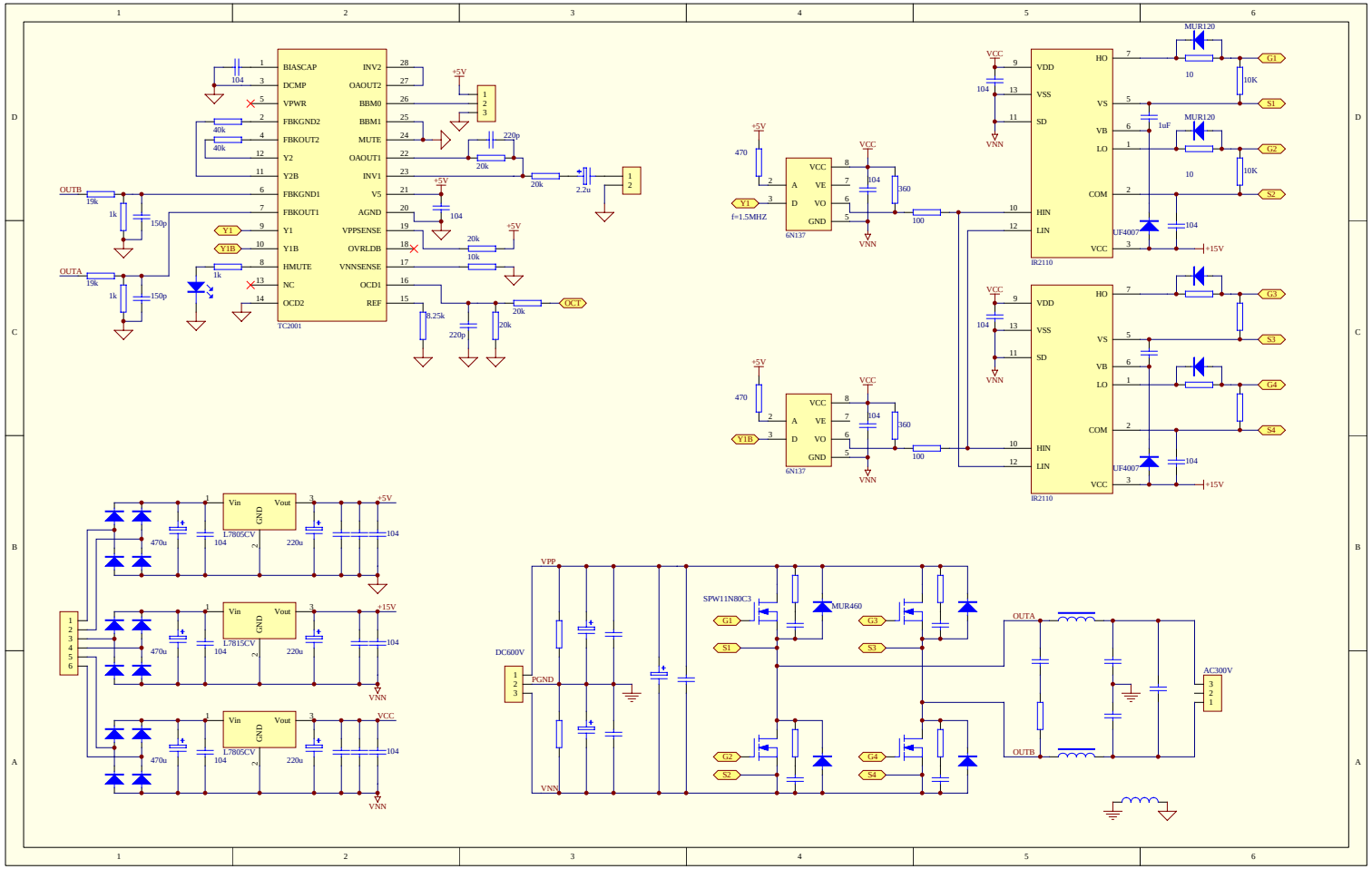
TC2001
BIASCAP
DCMP
VPWR
FBKGND2
FBKOUT2
Y2
Y2B
FBKGND1
FBKOUT1
Y1
Y1B
HMUTE
NC
OCD2
INV2
OAOUT2
BBM0
BBM1
MUTE
OAOUT1
INV1
V5
AGND
VPPSENSE
OVRLDB
VNNSENSE
OCD1
REF
OUTB
OUTA
OCT
6N137
IR2110
MUR120
UF4007
SPW11N80C3
MUR460
DC600V
AC300V
L7805CV
L7815CV
VPP
PGND
VNN
VCC
+5V
+15V
f=1.5MHZ