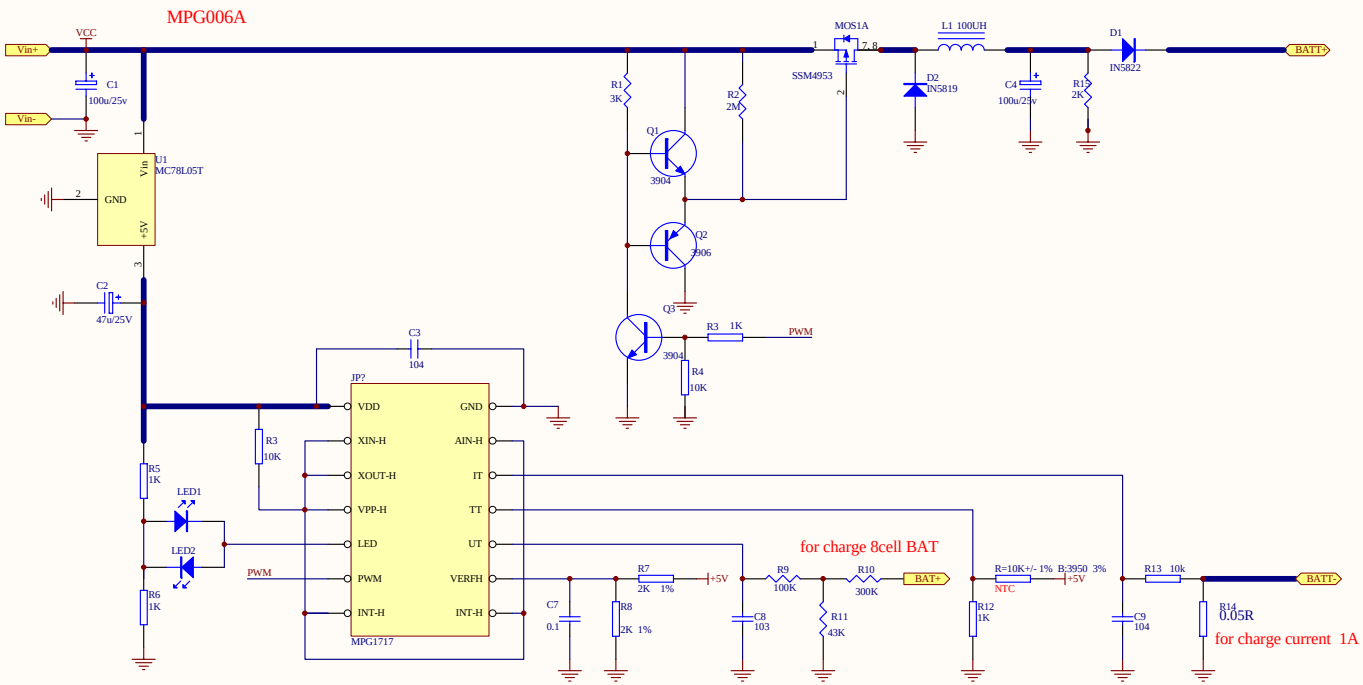

Title		
Size B	Number	Revision
Date: 20-Jun-2006		Sheet of
File: E:\OUT CIRCUIT\MPG003A.DDB		Drawn By: