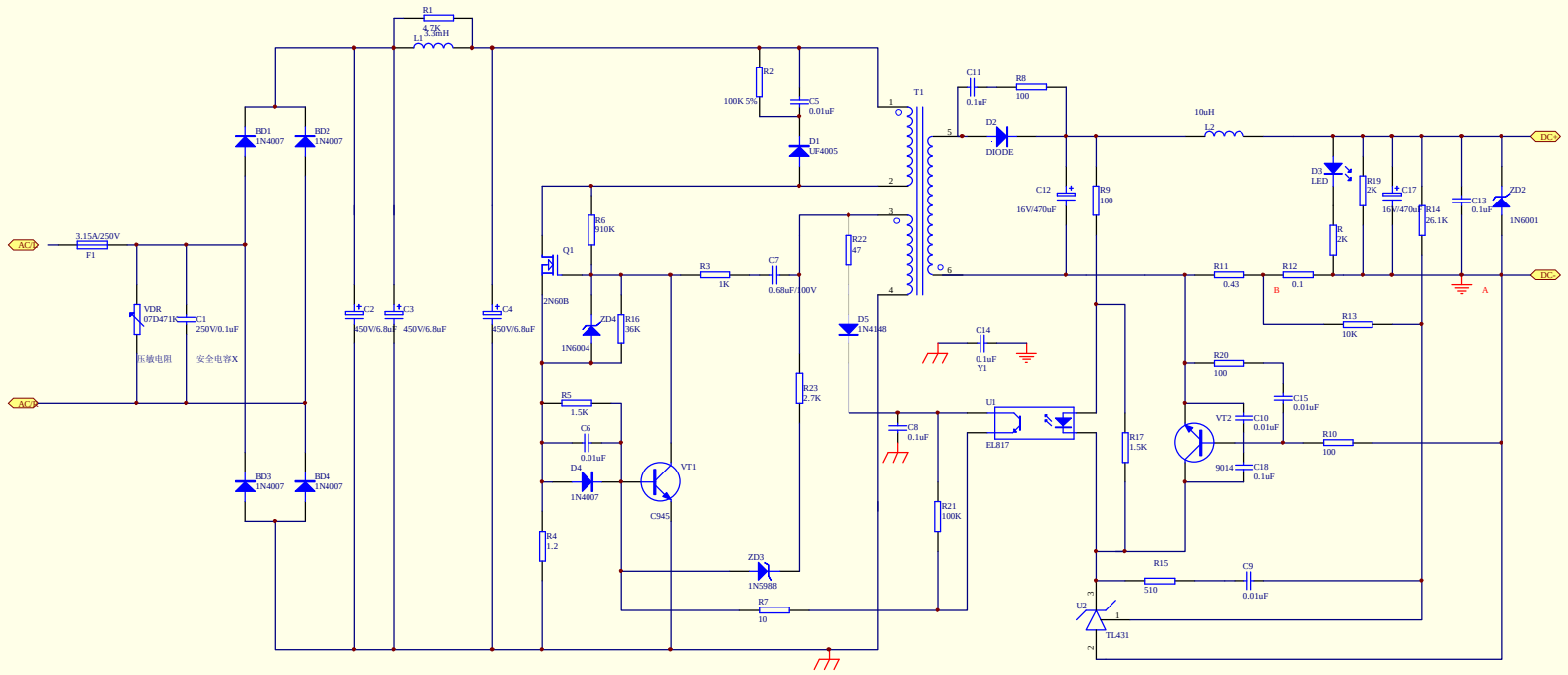

Title		
Size C	Number	Revision
Date: 4-Jul-2006	Sheet of	
File: E:\Design\PS9V1A-C0.ddb	Drawn By:	

PDF created with pdfFactory trial version www.pdffactory.com