CONTROL OF VOLTAGE STABILITY USING SENSITIVITY ANALYSIS

Miroslav M. Begović, Member IEEE
School of Electrical Engineering
Georgia Institute of Technology
Atlanta GA 30332–0250

Arun G. Phadke, Fellow IEEE
Dept. of Electrical Engineering
Virginia Polytechnic Institute & State Univ.
Blacksburg VA 24061–0111

1. ABSTRACT

The effects of static compensation on voltage stability boundary have been investigated in this paper. For a class of voltage instabilities which correspond to static bifurcations of load flow equations, minimum singular values of Jacobian matrix and total generated reactive power were calculated as indicators of stability margin, and sensitivity methods were used for reactive support allocation. Improvement in stability margin under progressive loading was investigated on a 39–bus test system for different allocations and amounts of reactive support with reactive generation capabilities taken into account.

Keywords – Voltage stability, static compensation, phasor measurements, power system control.

2. INTRODUCTION

Voltage collapse model based on static bifurcation theory [2][3][9] can explain a number of observed voltage collapse cases. Among many examples, the evidence of circumstances under which voltage collapse in Japan took place in 1987 [10] supports that standpoint and emphasizes the importance of load characteristics and system loading level on development of voltage instability. Although the disturbances which cause the system to move into static bifurcation may be of several types, two sources may be considered very probable causes of instabilities: **i)** contingencies (i.e. line outages) which leave the system transiently stable, but degrade the voltage stability margin; **ii)** slowly but continuously increasing loading of the system, especially when part of the system load consists of equipment designed to operate without loss of performance within wide range of supply voltages (stiff loads). Any combination of factors (i) and (ii) may move the system state closer to voltage stability boundary, until it reaches static bifurcation and descends into voltage collapse. Depending on the conditions in the network, voltage instability may last from several seconds to several minutes and is therefore often referred to as instability of the slow system dynamics. Such dynamic behavior indicates that a likely cause of voltage collapse are saddle–node static bifurcations (with codimension one of a load flow Jacobian, i.e. a single zero singular value). This hypothesis was successfully tested by simulation on a 39–bus test system [3]. Dynamic behavior of bifurcations characterized by higher order degeneracies of Jacobian is largely unknown due to the immense complexity of even simplified power system models of realistic size. It is believed by many researchers that a large number of voltage collapse cases may be attributed to saddle node bifurcations, even more so because they too are characterized by slow dynamic modes in the initial stages of instability. Both observations and simulations indicate that voltage collapses are accompanied by a sharp rise in reactive power generation. It was therefore proposed in [8] that sensitivities of generated reactive power with respect to increase of reactive demand, obtained via two optimal load flow calculations, be used for assessment of voltage stability margin. The use of minimum singular value of the load flow Jacobian matrix was proposed as another proximity indicator [9]. That idea was further elaborated in [4], where the concept of coherency among load buses with respect to voltage dynamics was introduced and an algorithm proposed for approximate assessment of $\sigma_{\min}\{J\}$ based on partial state information about network obtained from coherent clusters of load buses. The proposed application was based on the assumed availability of the real–time state monitoring system in the network, such as the phasor measurement system developed at Virginia Polytechnic Institute and State University, which is currently undergoing extensive laboratory and field testing.

Present state–of–the–art in microcomputer hardware and synchronization techniques for distributed measurement systems allow the design of monitoring systems which would be able to track slow dynamics system wide and generate alarms in situations when the system approaches stability boundary. The rates of state updates of the order of 100 ms are presently feasible. If fast central computer were installed in control center which would process system state information obtained that way, a real–time monitoring of voltage stability margin using some of the proposed techniques [4][8][9] would be possible. Given availability of alarms based on real–time monitoring, the problem of formulation of appropriate control actions remains to be resolved. There are a few possibilities for control when the system is approaching voltage stability boundary: some of the reported control actions include increasing reactive generation until maximum reactive generation capability and/or satisfactory system conditions are reached, freezing the operation of under–load tap–changing transformers, lowering voltages in the distribution network, and even performing load shedding in extreme situations. Most of these operations are based on engineering judgment and intuition rather then elaborate analytical techniques, because there are presently no VAr management systems in control centers.

A very important aspect of power system control is presented in this paper: effect of allocation and amount of reactive power support on voltage stability margin. It is based on sensitivity analyses of generated reactive power with respect to active and reactive load requirements at various locations in the system. The power system model is considered to undergo slow dynamic transition between steady states in a quasi–static manner, with loads modeled as constant complex power injections and reactive capabilities of generators taken into account. Proposed control algorithms lend themselves well to real–time applications in power systems. Examples are presented by simulation on a 39–bus, 10–generator power system [12] which shows quantitative effects of the proposed control.

3.POWER SYSTEM MODEL AND SENSITIVITY ANALYSIS

Let the system have n generators and m loads and $\theta \in \mathbb{R}^{m+n}$, $V \in \mathbb{R}^{m+n}$ and $\lambda \in \mathbb{R}^{p}$ be vectors of phase angles, voltage magnitudes and system parameters respectively (parameter vector includes transmission line and transformer parameters, tap changer positions, load requirements etc.). The load flow equations for the system in steady state are

$$\begin{aligned} f(\theta,V,\lambda)&=0 \\ g(\theta,V,\lambda)&=0 \end{aligned} \tag{1}$$

where f: $\mathbb{R}^{2n+2m+p} \mapsto \mathbb{R}^{n+m}$ and g: $\mathbb{R}^{2n+2m+p} \mapsto \mathbb{R}^{m}$ are nonlinear active and reactive power balance equations

91 WM 231-1 PWRS A paper recommended and approved by the IEEE Power System Engineering Committee of the IEEE Power Engineering Society for presentation at the IEEE/PES 1991 Winter Meeting, New York, New York, February 3-7, 1991. Manuscript submitted August 27, 1990; made available for printing January 3, 1991.

0885-8950/92$03.00©1992 IEEE

$$f_i = P_i - V_i \sum_{j=1}^{n+m} V_j \left[G_{ij}\cos\theta_{ij} + B_{ij}\sin\theta_{ij}\right],\ i=1,\ldots,n+m-1$$
$$g_i = Q_i - V_i \sum_{j=1}^{n+m} V_j \left[G_{ij}\sin\theta_{ij} - B_{ij}\cos\theta_{ij}\right],\ i=1,\ldots,m \tag{2}$$

where G_{ij}, B_{ij} and $\theta_{ij} = \theta_i - \theta_j$ are transmission line conductances, susceptances and phase angles between buses i and j, and $P = [P_1 \ldots P_m | P_{m+1} \ldots P_{n+m-1}]^t$ and $Q = [Q_1 \ldots Q_m]^t$, $(P \cup Q \subset \lambda)$ are vectors of active generation, active load requirements and reactive load requirements and bus $n+m$ is a slack bus. Loads are assumed to have constant complex power in this model, because such loads are 'stiff' and stress the system when the loading level is increasing. Also, in some composite load structures [10] observed in systems which actually experienced voltage collapse, near-constant power loads represented significant portion of the total load. Load flow algorithm can be modified to accommodate nonlinear load models, but it will be avoided here for the sake of brevity.

Let us assume that the system state (θ, V) is changing slowly due to the change of system loading (parameter λ) until it gets close to static bifurcation which induces voltage instability at the point $(\theta^o, V^o, \lambda^o)$. It is defined [2] as

$$f^o = f(\theta^o, V^o, \lambda^o) = 0$$
$$g^o = g(\theta^o, V^o, \lambda^o) = 0$$
$$\sigma_{min}\{J^o\} = \sigma_{min}\left\{\begin{bmatrix} D_\theta f^o & D_V f^o \\ D_\theta g^o & D_V g^o \end{bmatrix}\right\} = 0 \tag{3}$$
$$\sigma_{min}\{D_\theta f^o\} \neq 0$$

where $\sigma_{min}\{*\}$ is a minimum singular value of a matrix and D represents the operator of differentiation (applied to vector function with vector argument, it produces the Jacobian matrix). While the first three conditions alone define the static bifurcation of the equilibria (1), the fourth one is the additional requirement necessary to distinguish between voltage instability and so-called loss of steady state stability, or angular instability [2]. Let the function ψ: $\mathbb{R}^{2n+2m+p} \mapsto \mathbb{R}$ be a scalar indicator of proximity of the system state to voltage collapse

$$\lim_{\lambda \to \lambda^0} \psi(\theta, V, \lambda) = 0 \tag{4}$$

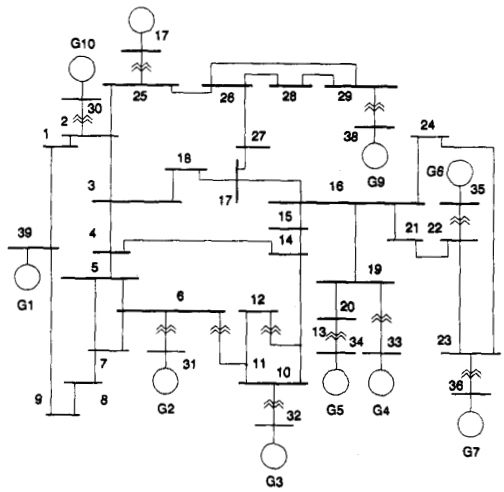

Figure 1. 39-bus, 10-machine test system used for simulations.

which does not necessarily have to be defined at the bifurcation point, but it should have a clear trend as the system approaches it (being monotonous with respect to loading and converging to zero at the bifurcation, as indicated by (4)). The objective is to determine a control $\Delta\lambda \in \mathbb{R}^p$ for which the system state would move back into the stable region, as identified by the change of proximity indicator

$$\Delta\psi = \max_{\|\Delta\lambda\| < \epsilon} \{\psi(\theta, V, \lambda_0 + \Delta\lambda) - \psi(\theta_0, V_0, \lambda_0)\} \tag{5}$$

where (θ_0, V_0) and λ_0 are the initial values of the system state and parameter vector before the change and ϵ is a positive constant. Since there are a number of elements of parameter vector which contribute to development of instability, an algorithm needs to be developed which would identify those elements whose influence is more pronounced. The choice is limited to the reactive load requirements in reactive power allocation problem, or both active and reactive loads in the problem of identification of critical loads. Let us denote the set of elements of λ which correspond to active and reactive load requirements $\mathcal{P}$ and $\mathcal{Q}$ respectively. We can define the reactive power allocation problem with respect to voltage stability as a search for $\lambda_i \in \mathcal{Q}$ in a given state $(\theta, V \mid \lambda)$ which affect ψ most

$$\left\| \frac{\partial\psi}{\partial\lambda_i}\bigg|_{\lambda_i \in \mathcal{Q}} \right\| \geq \epsilon_t \tag{6}$$

where ϵ_t is a given threshold. The value of ϵ_t may be chosen so that condition (6) is satisfied by a desired number of k elements $\lambda_{i1}, \lambda_{i2}, \ldots, \lambda_{ik}$ $(\lambda_{ij} \in \mathcal{Q})$. Those elements correspond to sensitivities with respect to reactive power requirements at buses which affect ψ most. Depending on the feasibility of installation and available resources, k may be fixed and (6) used to determine the locations for reactive support based on sorting $\partial\psi/\partial\lambda_i$ in descending order and choosing the first k of them (their respective locations) for reactive support. Minimization of k may be accomplished the following way: i) determine coherent clusters of buses with respect to voltage fluctuations as proposed in [4]; ii) identify one bus in each cluster which corresponds to the largest sensitivity factor $\partial\psi/\partial\lambda_i$; iii) install one source of reactive support in each cluster, in the location determined by (ii). The condition for identification of critical loads for the purpose of emergency control [12] may be similarly defined as a search for pairs P_i, Q_i which are active and reactive parts of load i and satisfy the condition

$$\left\| P_i \frac{\partial\psi}{\partial P_i} + Q_i \frac{\partial\psi}{\partial Q_i} \right\| \geq \epsilon_t \tag{7}$$

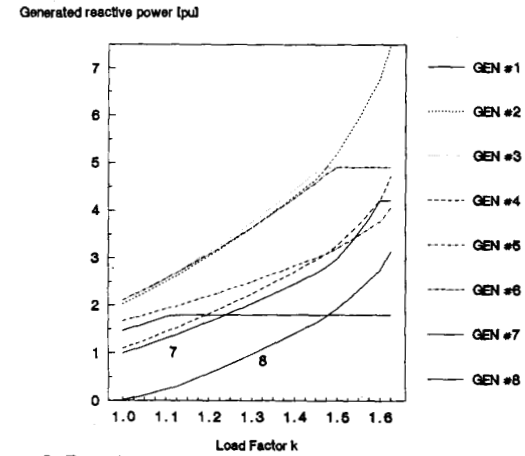

Figure 2. Reactive power output on 8 most heavily loaded machines during proportional loading.

If the bus without any load, or with a very small load is identified as having very large sensitivities, it may still be disregarded by the method (7), because of the scaling effect on the gradients. Only the buses having **both** heavy load and large sensitivities will be singled out for shedding. It is important to note, however, that the buses with the largest sensitivities are the ones where even small increase of the load can bring the system to instability if some sort of emergency control is not undertaken. Such buses are referred to as the critical buses. The proximity indicator to voltage collapse ψ may be defined in a number of ways: several indicators based on the condition of a load flow Jacobian or voltage collapse accompanying effects have been proposed in the literature. All of them represent some measure of near - singularity of the system and comply with (4). It should be noted that they **do not** need to be defined in the bifurcation point to be used as indicators, or alarms. Their main purpose is to help detect the system's **approach** to voltage instability, when something still can be done to prevent the system breakdown. The choice of $\psi = \sigma_{min}\{J\}$, although very appropriate [9][4], imposes a computational burden on calculation of sensitivity factors, and a nonlinearity near bifurcation, which may be accompanied by discontinous changes of gradients with respect to loading due to transitions of the generators into a constant reactive power mode. Authors of [14] analyze sensitivities of their indicator, based on multiple load flow solutions, whose calculation is computationally demanding. The sensitivity analysis of Lyapunov-like energy functions with respect to controllers in generation loop is proposed in [15]. The method requires the calculation of unstable equlilbrium points, which is also computationally intensive. The analysis of total generated reactive power which can be expressed as a sum of g_i, $(i=m+1,...,m+n)$ may give more intuitive insight to our analysis. Total generated reactive power encompasses both load requirements and transmission losses, and may be expressed as

$$\psi^{-1} = Q_g^t = \sum_{i=m+1}^{m+n} \sum_{i=1}^{m+n} V_i V_j [G_{ij}\sin\theta_{ij} - B_{ij}\cos\theta_{ij}] \tag{8}$$

from which the sensitivity factors with respect to the state vector $x = (\theta, V)^t$ can be easily calculated and arranged in the Jacobian vector

$$J_g = \left[\frac{\partial Q_g{}^t}{\partial x_j}\right] \tag{9}$$

Since the load flow Jacobian is

$$J = \left[\frac{\partial y_i}{\partial x_j}\right] \tag{10}$$

where $y = [P\ Q]^t$, the sensitivities of Q_g^t with respect to changes in load powers **y** may be expressed as

$$S = \left[\frac{\partial Q_g{}^t}{\partial y_j}\right] = \left[\frac{\partial Q_g{}^t}{\partial x_j}\right]\left[\frac{\partial x_i}{\partial y_j}\right] = J_g \cdot J^{-1} \tag{11}$$

The elements of vector S are

$$S = \left[\frac{\partial Q_g{}^t}{\partial P_1} \cdots \frac{\partial Q_g{}^t}{\partial P_m}, \frac{\partial Q_g{}^t}{\partial P_{g1}} \cdots \frac{\partial Q_g{}^t}{\partial P_{g,n-1}}, \frac{\partial Q_g{}^t}{\partial Q_1} \cdots \frac{\partial Q_g{}^t}{\partial Q_m}\right] \tag{12}$$

and it can be partitioned into parts that correspond to active load requirements, active generation and reactive load requirements

$$S = [\, S_p \mid S_g \mid S_q \,] \tag{13}$$

For the allocation of reactive support, we are interested only in elements of S_q, which represent the sensitivities of Q_g^t with respect to reactive load requirements at various locations. Elements of S_q should be sorted by magnitude in order to grade locations for installation of *constant VAr support*. If shunt capacitors are to be used for reactive support (which is a good choice for voltage stability application), sensitivities of reactive

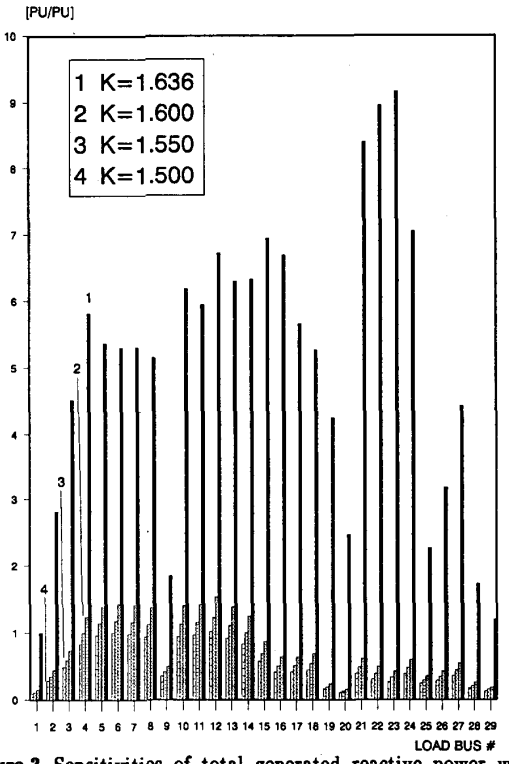

Figure 3. Sensitivities of total generated reactive power with respect to shunt susceptances at various locations.

powers with respect to shunt susceptances B_i will be

$$S_{qb} = \left[\frac{\partial Q_g{}^t}{\partial Q_1} \cdot \frac{\partial Q_1}{\partial B_1} \ \cdots \ \frac{\partial Q_g{}^t}{\partial Q_m} \cdot \frac{\partial Q_m}{\partial B_m}\right]$$
$$S_{qb} = \left[\frac{\partial Q_g{}^t}{\partial Q_1} \cdot V_1^2 \ \cdots \ \frac{\partial Q_g{}^t}{\partial Q_m} \cdot V_m^2\right] \tag{14}$$

Determination of k locations for reactive support with shunt capacitors should now be based on selection of the locations which correspond to first k elements of the sorted vector S_{qbs}. The installed capacities of reactive support should relate to each other in proportion to their respective sensitivities.

If critical loads are to be identified for the purpose of emergency load shedding, corresponding pairs of sensitivity factors from S_p and S_q should be tested as in (7) and sorted by magnitudes in S_{pqs}. First element of the sorted list corresponds to the location which can affect the development of voltage instability most. It may happen that the amount of load at that location is not sufficient to provide enough relief by shedding. In that case, next element from the list is a candidate for shedding, etc. Caution should be exercised, however, that not too many loads are disconnected from the system, because the purpose of the emergency control is to affect the least number of customers. Besides, abrupt and excessive load shedding would disrupt power flow patterns to the extent of actually deteriorating the stability margin until redistribution of generation is accomplished.

When very large power systems are to be analyzed, total generated reactive power may be too insensitive to the changes of individual loads. In such situations, a better idea may be to use the total generated reactive power in coherent clusters of buses [4] and calculate their sensitivities with respect to the cluster loads and intercluster power transfers. The application of the above described algorithms is the subject of continuing research interest of the authors, but the analysis of the details involved is beyond the scope of this paper.

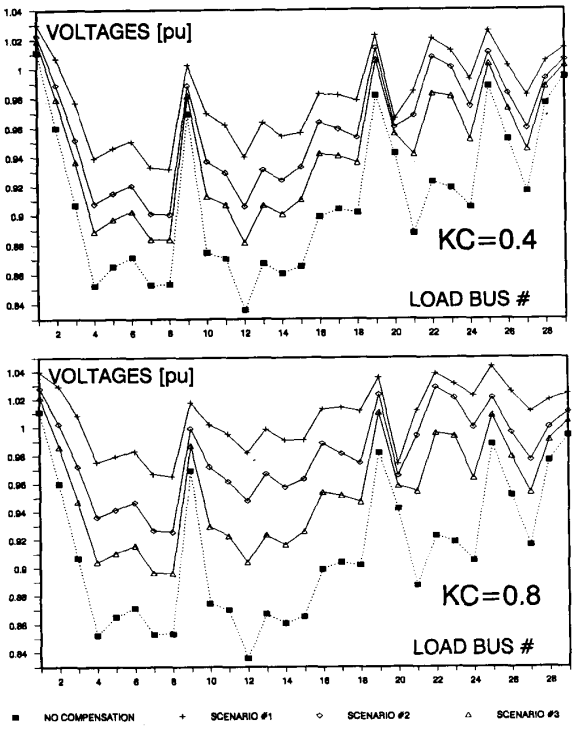

Figure 4. Voltage profiles for various scenarios and compensation factors.

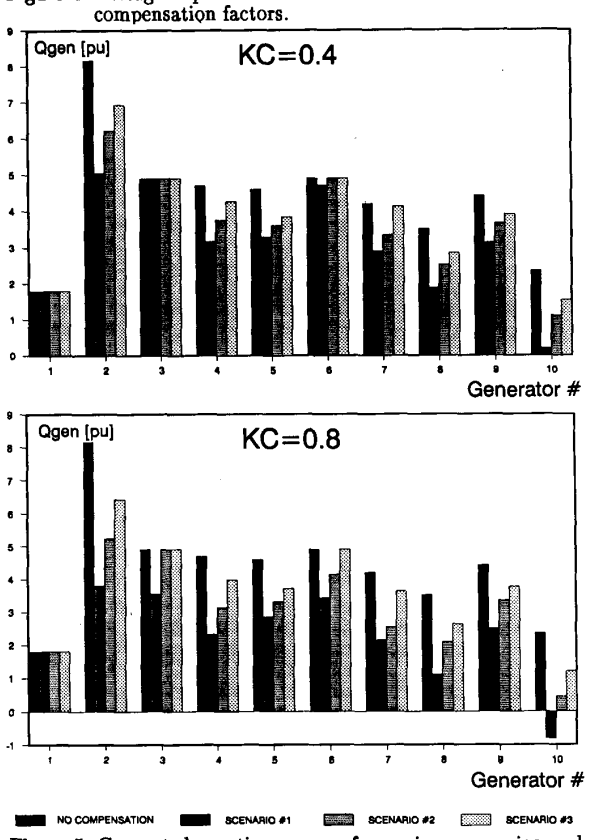

Figure 5. Generated reactive powers for various scenarios and compensation factors.

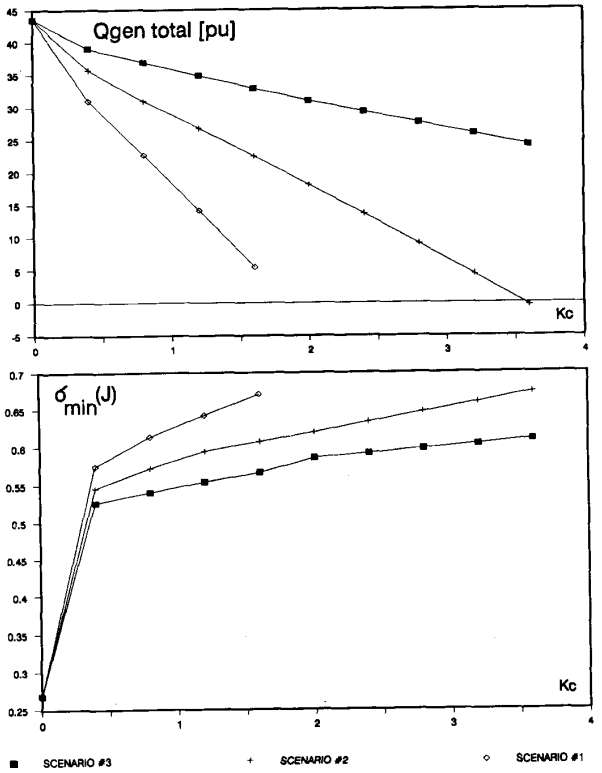

Figure 6. Total generated reactive power and minimum singular value of Jacobian as functions of allocations of reactive support and compensation factors.

The sensitivity method for determination of critical loads based on total reactive power generation is very effective in allocating vulnerable points in the near-unstable power system. It is much simpler then methods based on analysis of $\sigma_{min}\{J\}$ because it only requires partial inversion of Jacobian matrix (the calculation of S_g is not necessary) and one matrix multiplication (with vector J_g). The algorithm lends itself well to applications in very large power systems, because it can take advantage of sparsity techniques for further acceleration of the calculation. The authors have made a number of comparative tests of the algorithm with methods based on the sensitivity of $\sigma_{min}\{J\}$, in which almost identical conclusions were drawn for a number of voltage instability scenarios. The results presented in the next two sections show quantitative effects of the application of algorithm in a 39-bus, 10-generator test system [12] shown in Figure 1.

4. SHUNT COMPENSATION AND VOLTAGE STABILITY

Improved reactive support is one of the possible cures for voltage instability. Voltage collapse may be viewed as a dynamic consequence of a power system condition which manifests itself as infinite sensitivity of the reactive power generation with respect to loading (this may also be viewed as a physical interpretation of the singularity of Jacobian). When the system is approaching static bifurcation, reactive generation is increasing on some of the generators (all but those which reach the reactive capability limit and switch into P-Q mode with dependent terminal voltages). This situation is shown in Figure 2, where reactive generation is shown on 8 most heavily loaded generators of the system of Figure 1. The loading pattern used is characterized through a single multiplier k (load factor). If nominal system conditions correspond to k=1, load requirements and active power generation are

$$
\begin{aligned}
P_\ell^0 &= [\, P_{\ell 1}^0 \;\; P_{\ell 2}^0 \;\; \dots \;\; P_{\ell m}^0 \,]^t \\
Q_\ell^0 &= [\, Q_{\ell 1}^0 \;\; Q_{\ell 2}^0 \;\; \dots \;\; Q_{\ell m}^0 \,]^t \\
P_g^0 &= [\, P_{g1}^0 \;\; P_{g2}^0 \;\; \dots \;\; P_{g,n-1}^0 \,]^t
\end{aligned} \tag{15}
$$

and system conditions for load factor k are given as

$$
\begin{aligned}
P_\ell(k) &= k \cdot P_\ell^0 = [\, k \cdot P_{\ell 1}^0 \;\; k \cdot P_{\ell 2}^0 \;\; \dots \;\; k \cdot P_{\ell m}^0 \,]^t \\
Q_\ell(k) &= k \cdot Q_\ell^0 = [\, k \cdot Q_{\ell 1}^0 \;\; k \cdot Q_{\ell 2}^0 \;\; \dots \;\; k \cdot Q_{\ell m}^0 \,]^t \\
P_g(k) &= k \cdot P_g^0 = [\, k \cdot P_{g1}^0 \;\; k \cdot P_{g2}^0 \;\; \dots \;\; k \cdot P_{g,n-1}^0 \,]^t
\end{aligned} \tag{16}
$$

The simulation of approach to voltage stability boundary is based on a sequence of increasing load factors for which the load flow calculations are performed and $\sigma_{\min}\{J\}$ calculated. In every load flow calculation, generated reactive powers are checked to fit between specified limits

$$
Q_{gi}^{\min} \le Q_{gi} \le Q_{gi}^{\max} \quad , i=1,2,\dots,n-1 \tag{17}
$$

Generator buses which fail test (17) are transformed into P–Q buses and the calculations repeated. Figure 3 shows sensitivities of total generated reactive power Q_g^t with respect to shunt susceptances B_i (14) for various values of k near bifurcation value, which was obtained for k=1.636. It is noticeable that for a range of load factors $k \in [1.500, 1.600]$, and (not shown in Figure 3) below that range, the relative magnitudes of sensitivity factors are very similar, although their absolute values vary with k. If allocation of shunt capacitors were determined for that range of k, choices would be in clusters 4–8 and 10–15. When load factor increases from 1.600 to just 1.636 (last value for which the convergent load flow was obtained), not only do the magnitudes of sensitivities climb almost tenfold, but also the critical locations shift to buses 21–24 due to transition of generator G7 to constant reactive power mode, preventing it from supplying enough reactive power to bus #23 and buses connected to it (#21, #22, #24). It seems very likely that the points of transition of some generators into P–Q mode during the loading process may represent the critical (or near critical) values of system loading, because the rerouting of reactive powers needed to supply buses previously fed by those generators may prove impossible given system conditions. Since near-unstable situations arise when reactive support is needed most, such system states should be the starting point for sensitivity analysis. That implies that the typical loading patterns for a system under consideration must be known to the analyst who intends to apply sensitivity based methods.

The sensitivities of the cluster 21–24 are the highest, followed by sensitivities within clusters 4–8 and 10–18. They can be interpreted as follows: if the dependence were linear, an increase of reactive demand at buses 21–24 by 100 MVAr would require approximately 900 MVAr of increase of reactive power generation distributed among system generators proportionally to the values of their relevant sensitivity coefficients. For illustration, three scenarios of shunt compensation were chosen:

i) Shunt capacitors B_i available at *all* load bus locations with nominal values (in *pu*) equal to 10% of their numerical values in Figure 3;

ii) Shunt capacitors installed at 10 most vulnerable locations only (10,12,13,14,15,16,21,22,23,24) with nominal values equal to their corresponding values in (i);

iii) Shunt capacitors installed at 4 locations only (4,12,15,23) with nominal values equal to those in (i); locations are chosen in such a way that some compensation is available in each of the coherent clusters.

First two scenarios illustrate the straightforward application of (6) for ϵ_t=0 and ϵ_t=6 [pu/pu] respectively. The third scenario represents the situation when reactive support is

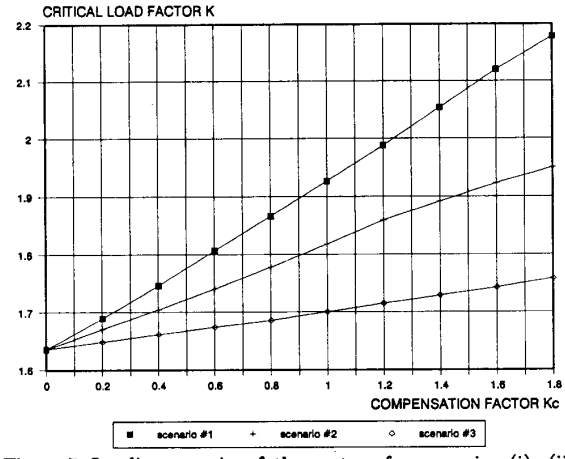

Figure 7. Loading margin of the system for scenarios (i), (ii) and (iii) and various compensation factors.

placed selectively in coherent clusters of buses [4]. Total values of installed susceptances are B^1=14.50 pu, B^2=7.22 pu and B^3=2.85 pu. In order to change the amount of compensation in simulations, a compensation factor k_c is introduced

$$
B_i(k_c) = B_i \cdot k_c, \; i \in \begin{cases} \{1,2,\dots,29\} & \textit{for (i)} \\ \{10,12,\dots,16,21,\dots,24\} & \textit{for (ii)} \\ \{4,12,15,23\} & \textit{for (iii)} \end{cases} \tag{18}
$$

which is a simple multiplier which is applied to all installed sources of reactive support. For k_c=*0* there is no compensation while k_c=*1* gives total installed values. Other choices give possibility to investigate the effects of various amounts of compensation on the system state as a continuous function of k_c. Figure 4 shows the voltage profile at load buses for $k_c \in \{0, 0.4, 0.8\}$ for all three proposed scenarios. As expected, voltage profiles get better as more compensation becomes available. Figure 5 shows generated reactive powers on all machines in the system for the cases shown in Figure 4. While as many as 5 generators are in the $P-Q$ mode for k_c=*0*, only one (G1) remains in that mode for k_c=*0.8* and scenario (i), and one machine (G1) even starts consuming reactive power! Figure 5 shows generated reactive powers on all machines as compensation scenarios and k_c change (3 generators are still in $P-Q$ mode for k_c=*0.8* and scenario (iii); 2 generators remain in $P-Q$ mode with k_c=*0.8* and scenario (ii)). Figure 6 shows total generated reactive powers Q_g^t and $\sigma_{\min}\{J\}$ for the three scenarios as a function of k_c. The correlation between k_c and the stability margin (measured by Q_g^t and $\sigma_{\min}\{J\}$) is obvious. Figure 6 dramatically shows how much nonlinearity is involved in $\sigma_{\min}\{J\}$ near bifurcation while the total generated reactive power is changing almost linearly with the load factor. That makes the generated reactive powers much more suitable indicator of the stability margin. Figure 7 shows another simulation result: starting with every scenario and several values of k_c, loading was increased using (16) until bifurcation values were reached for compensated systems. The results suggest that relatively small amounts of compensation (such as those represented by scenario (iii)) can provide satisfactory improvement in voltage profile, but can improve loadability of the system by just Δk=*0.05* for k_c=*1*. In other words, full installed capacity of reactive support will increase the maximum loading level by only about *5%*. More substantial, but less realistic compensation schemes like scenario (i) can improve loadability by Δk=*0.3* for k_c=*1*. This means that a common belief that more compensation is equivalent to safe operation is true only if fairly large amounts of compensation are available. Otherwise, small amounts of compensation may even fool the system operators into a false sense of security (judged by voltage profiles) while the system may indeed be at the brink of voltage instability. This latent danger suggests

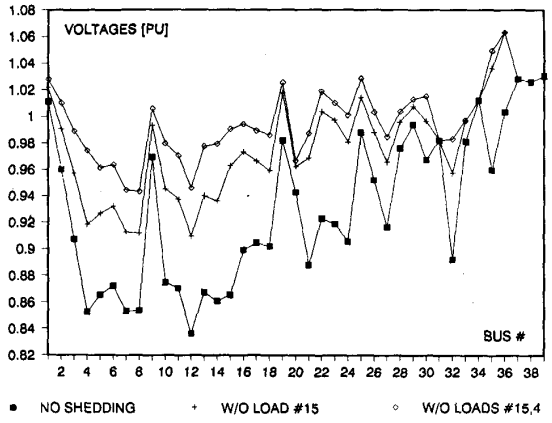

Figure 8. Voltage profile as a consequence of load shedding.

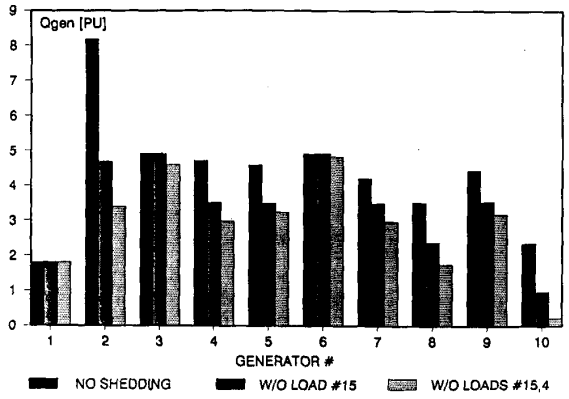

Figure 9. Generated reactive powers as a consequence of load shedding.

that a real-time monitoring of voltage stability is very desirable, especially in compensated systems (scenarios can easily be constructed in which the system voltages remain well above *0.9 pu* at bifurcation due to the effects of compensation) [13].

When the changes of power system state due to the increasing loading are such that available reactive compensation cannot provide sufficient relief and the system is at the verge of voltage collapse, harmless means of control being exhausted, the only remaining emergency control is load shedding. The identification of critical loads is based on sorting the sensitivity factors (7). An adequate choice of alarm setting (threshold ϵ_t in (7)) should provide early enough alarm to prevent instability. The alarm should therefore be triggered much before the system experiences the static bifurcation. The effects of load shedding on improvement of voltage profile and stability margin is dramatic [12] (Figures 8 and 9). Although not in favor of such a drastic control, the authors feel that it is more preferable then voltage collapse, especially when its negative effects are minimized by making selection of critical load buses using sensitivity analysis presented above.

5. CONCLUSIONS

i) Sensitivity analysis of total generated reactive power provides useful information about vulnerability of the parts of the power system with respect to voltage instability.

ii) An algorithm is presented in the paper for determination of sensitivities of total generated reactive power with respect to loads at various locations in the system. The simplicity of the algorithm makes it attractive for applications in monitoring and control systems.

iii) Allocation and amount of shunt compensation have strong effects on voltage stability margin. Although desirable, only very large amounts of shunt compensation can improve stability margin appreciably. Small amounts of compensation may be dangerous because of masking effect on voltage profile near bifurcation points. Use of real-time monitoring system is a solution.

iv) When emergency load shedding is unavoidable, efficient identification of critical loads can be accomplished with very little computational effort [12] and substantial improvement of stability margin obtained with the least number of loads affected.

REFERENCES

[1] C. Barbier and J.-P. Barret: "An Analysis of Phenomena of Voltage Collapse on a Transmission System", *Revue Générale d'Electricité*, Special Issue, July 1980., pp.672–690.

[2] H.G. Kwatny et al.: "Static Bifurcations in Electric Power Networks: Loss of Steady-State Stability and Voltage Collapse", *IEEE Trans. on Circuits and Systems*, Vol. CAS-33, No.10, Oct. 1986., pp.981–991.

[3] M. Begović, A. G. Phadke: "Dynamic Simulation of Voltage Collapse", *Proc. PICA 1989 Conference*, Seattle, WA, May 1989, pp. 336–341.

[4] M. Begović, A. G. Phadke: "Voltage Stability Assessment Through Measurement of the Reduced State Vector", paper 89 SM 709-7 PWRS, *1989 IEEE PES Summer Meeting*, Long Beach, CA, July 1989.

[5] C. Barbier et al.: "Demands on Reactive Power Compensation to Maintain Acceptable Voltages on the French Network: Planning and Method of Operating Shunt Capacitors", *Revue Générale d'Electricité*, Special Issue, July 1980, pp. 22–36.

[6] C. S. Indulkar, B. Viswanathan, S. S. Venkata: "Maximum Power Transfer Limited by Voltage Stability in Series with Shunt Compensated Schemes for AC Transmission Systems", *IEEE Trans. on Power Delivery*, Vol.4, No.2, April 1989, pp.1246–1252.

[7] A. Venkataramana, J. Carr, R. S. Ramshaw: "Optimal Reactive Power Allocation", paper 86 WM 103-6, *IEEE PES Winter Meeting*, New York, February 1986.

[8] J. Carpentier, R. Girard, E. Scano: "Voltage Collapse Proximity Indicators Computed from an Optimal Load Flow", *Proc. 8th PSCC Conference*, Aug. 1984, pp.671–678.

[9] A. Tiranuchit, R. J. Thomas: "A Posturing Strategy Against Voltage Instabilities in Electric Power Systems", *IEEE PES Winter Meeting 1987*, paper 87 WM 095-3, New Orleans, Louisiana, February 1987.

[10] A.Kurita, T.Sakurai: "The Power System Failure on July 23, 1987 in Tokyo", *Proceedings of the 27th Conference on Decision and Control*, Austin, Texas, December 1988, pp.2093–2097.

[11] Systems Engineering for Power: Emergency Operating State Control, *CONF-790904-P1, DOE*, Davos, Switzerland, Sept. 1979, pp.114.

[12] M. Begović, A. Phadke: Power System Emergency Control Near Voltage Instability", *Proc. 27th CDC*, December 1989, Tampa, Florida.

[13] Tamura et al.: "Relationship Between Voltage Instability and Multiple Load Flow Solutions in Electric Power Systems", *IEEE Trans. on PAS*, Vol. 102, No.5, May 1983, pp.1115–1125.

[14] Tamura et al.: "Voltage Instability Proximity Index (VIPI) Based on Multiple Load-Flow Solutions in Ill-Conditioned Power Systems", *Proc. 27th IEEE CDC*, Austin, TX, Dec. 1988.

[15] T. Overbye, C. DeMarco: "Voltage Security Enhancement Using Energy Based Sensitivities", 1990 IEEE PES Summer Meeting, paper 90 SM 478-8 PWRS, Minneapolis, MN, July 1990.

APPENDIX - LOADING AND COMPENSATION SCENARIOS

	PARAMETER	MULTIPLYING
SYSTEM LOADING	LOAD FACTOR K	LOADS AND GENERATION
SHUNT SUPPORT	COMP. FACTOR Kc	SHUNT CAP'S (BASE)

COMPENSATION	BASE LOCATIONS	CHOICE BASED ON
SCENARIO 1	ALL BUSES	IDEAL CASE
SCENARIO 2	10-12,13-16,21-24	MOST SENSITIVE 10
SCENARIO 3	4,12,15,23	CENTERS OF CLUSTERS

* RELATIVE SENSITIVITIES AS IN FIGURE 3
* ALL BASE CASE VALUES AS IN FIGURE 3 [PU]

ACKNOWLEDGEMENT

The authors acknowledge the financial support of US Department of Energy, the Bonneville Power Administration, Portland, Oregon, and the National Science Foundation.

BIOGRAPHIES

Miroslav Begović (S'87, M'89) received the Dipl.Ing. and Mr.Ing. degrees from Belgrade University, Yugoslavia in 1980 and 1985 and Ph.D. from Virginia Polytechnic Institute and State University in 1989, all in electrical engineering. He was an Assistant in the Electrical Engineering Department of Belgrade University from 1981 to 1985. From 1985 to 1989, he was a teaching and research assistant in the Electrical Engineering Department at Virginia Polytechnic Institute and State University. In 1989, he joined Georgia Institute of Technology as Assistant Professor. His research interests are in the areas of power system stability, real-time measurements and computer applications in power systems. Dr. Begović is a member of Eta Kappa Nu, Sigma Xi, Tau Beta Pi and Phi Kappa Phi.

Arun G. Phadke (F'80) Professor, Electrical Engineering Department at VPI&SU, Blacksburg, VA. He was a System Engineer with Allis Chalmers Company (Milwaukee, Wisconsin) from 1963 - 1967. There he participated in the design and development of the AC/DC Simulator Laboratory at the University of Wisconsin, Madison. He was an Assistant Professor of Electrical Engineering at the University of Wisconsin, Madison from 1967 - 69. He than joined the American Electric Power Service Corporation in New York in 1969. His responsibilities at AEP as a Consulting Engineer included the management of the Substation Computer Project. He was a Visiting Professor at VPI&SU during 1978 - 79 on leave of absence from AEP. He joined VPI&SU permanently in January 1982. Dr. Phadke is a Convener of CIGRE Working Group 34.02 on Computer Systems for Substations.

Discussion

Ian Dobson (University of Wisconsin, Madison, WI): We agree with the authors that the initially slow dynamics of voltage collapse are consistent with the dynamic consequences of a saddle node bifurcation and in particular a generically occurring saddle node bifurcation at which the system Jacobian has a single, simple zero eigenvalue. This hypothesis is due to [1, 2] and the dynamic consequences of a generically occurring saddle node bifurcation may be simply modelled by movement along the unstable part of the center manifold of the bifurcating equilibrium [2]. That is, at bifurcation the power system operating point disappears and the system state moves along a particular, computable collapse trajectory. The authors mention that they tested this hypothesis by simulation. However, the best evidence for the validity of this hypothesis comes from a theorem of Sotomayor which we approximately paraphrase as follows (see [2] for more information): Given a generic power system model of differential equations with parameters such as loads varying slowly with time, then saddle node bifurcations at which the Jacobian has a single, simple zero eigenvalue occur generically. (The only other bifurcations occurring generically are Hopf bifurcations but we neglect this possibility since a Hopf bifurcation would lead to an oscillatory instability and this has, apparently, not been observed in voltage collapses.) The power of Sotomayor's theorem is that it applies to generic power system differential equation models of *arbitrary* size and complexity. The center manifold model of the dynamics of voltage collapse also applies to generic power system differential equation models of arbitrary size and complexity.

One consequence of Sotomayor's theorem is that bifurcations with higher order degeneracies of the Jacobian are not generic and therefore are not expected to occur in practice. If they did occur, the complexity of the consequent dynamics would be governed by the codimension and type of bifurcation and not, as suggested by the paper, by the complexity of the power system model. This observation may be understood by analogy with the practically relevant case of a generically occurring saddle node bifurcation: the dynamic consequences of a generically occurring saddle node bifurcation are essentially one dimensional (movement along a particular trajectory) in a power system model of *arbitrary* complexity.

As regards the discussion of the fourth equation of (3) in the paper, we prefer a more general conception of the proportion of angular and voltage instability and note that combinations of angular and voltage stability may be expected by practice and may be detected by examining the components of the right eigenvector corresponding to the zero eigenvalue of the system Jacobian at bifurcation [2].

The paper's assertion that the minimum singular value $\sigma_{\min}(J)$ has discontinuous gradient when generator reactive power limits are encountered is correct but misleading. In fact, the minimum singular value (and, indeed, any continuous function of the Jacobian) is *discontinuous* when generator reactive power limits are encountered. This follows from the instantaneous change in the system equations when a generator reactive power limit is encountered. Note, however, that the system operating point does not change when the reactive power limit is encountered. Our claim of discontinuities refers to indices based on the high level power system models (such as those of the paper) which are expected to be used to monitor and avoid voltage collapse. Thus the discontinuities of these indices will be a difficulty in practical computation of voltage collapse security regardless of the (presumed) continuity of the underlying physical quantities when the reactive power limit is encountered.

The observation that the minimum singular value index can be discontinuous is by no means a comment on the present paper or the minimum singular value index alone; most of the voltage collapse indices proposed in the literature which are functions only of the system *before* a reactive power limit is encountered are discontinuous when the reactive power limit is encountered. The literature has apparently failed to clearly state the somewhat unpalatable discontinuities of these indices. Exceptions are indices such as the total generated reactive power index of the paper which are a functions of the system operating point only and hence continuous when a reactive power limit is encountered. Two other exceptions are the energy function index of Overbye and DeMarco [3] and the load power margin index when proper account is taken of the reactive power limits as, for example, in Van Cutsem [4].

The paper suggests the reciprocal of the total generated reactive power as an index ψ of voltage collapse in equation (8). However, as the bifurcation is approached, ψ does not tend to zero as required in equation (4). This may be illustrated for a two bus system with bus 1 a PQ load and bus 2 a slack generator as follows: Write (θ_{21}^0, V_1^0) for the equilibrium at bifurcation and λ^0 for the loading parameter at bifurcation. Then, as the loading parameter $\lambda \to \lambda^0$, $\theta_{21} \to \theta_{21}^0$, $V_1 \to V_1^0$ and $\psi \to \psi^0 \neq 0$ where

$$(\psi^0)^{-1} = V_2 V_2^0 G_{21} \sin \theta_{21}^0 - V_2 V_1^0 B_{21} \cos \theta_{21}^0 - V_2^2 B_{22}$$

The failure of condition (4) for this index is a drawback because its value ψ^0 at bifurcation is not independent of the system configuration and loading.

We would appreciate the authors' consideration of our comments.

References

[1] Dobson, I., Chiang, H.-D., Thorp, J. S., Fekih-Ahmed, L., "A Model of Voltage Collapse in Electric Power Systems," *Proceedings of the 27th IEEE Control and Decision Theory Conference*, Austin, Texas, Dec. 1988, p. 2104-2109.

[2] Dobson, I., Chiang, H.-D., "Towards a Theory of Voltage Collapse in Electric Power Systems," *Systems and Control Letters*, Vol. 13, 1989, pp. 253-262.

[3] T. J. Overbye, C. L. DeMarco, "Voltage security enhancement using energy based sensitivities," 90 SM 478-8 PWRS, *IEEE/PES Summer Meeting*, Minneapolis, MN, July 1990.

[4] T. Van Cutsem, "A method to compute reactive power margins with respect to voltage collapse", *IEEE Transactions on Power Systems*, vol. 6, no. 2, Feb. 1991, pp. 145-156.

Manuscript received February 26, 1991.

T. Baldwin and L. Mili (Virginia Polytechnic Institute and State University, Blacksburg, Virginia): The authors are to be congratulated for a well written paper which addresses an important application of the phasor measurement units to power system monitoring and control. The authors' comments will be appreciated on the following:

1) It has been found [1] that the coherent regions with respect to voltage dynamics change dramatically when the system is heavy loaded and the generators reach their Q–limits. For example, under light load conditions, the New–England 39–bus system may be decomposed into 6 coherent regions as shown in Figure 1. But as the reactive power at the load bus 16 is increased beyond a critical value, the regions A, B, D and F merge into a single coherent region. Here, all the generators have reached their Q–limits except the generators connected to bus 37, 38, and 39. It is clear that the placement of reactive power compensation should account for the dynamics of the coherent regions.

2) The example described above reveals that at the critical operating point where the coherent regions merge (an operating point which occurs well before the bifurcation point), the minimum singular value of the Jacobian matrix starts to decrease sharply, from 0.67 to 0 as shown in Figure 2. Before this critical point, the rate–of–change of the minimum singular value is small; it decreases from 0.75 to 0.67. Note that the discontinuities observed in the minimum singular value are due to the Q–limits reached by some generators. In fact, the Q–limits create a structural change in the Jacobian matrix as demonstrated in [2]. In addition, they cause the bifurcation point to occur at a lighter load condition. All these make the minimum singular value a very poor predictor to voltage instability. In our opinion, it can provide at most an alarm when it is compared to a positive threshold (which has to be load independent) and coupled with other tests such as the test on the rate–of–change of the reactive power supplied by the generators. Indeed, it is observed [3] that a voltage collapse within a coherent region is generally preceded by a rapid rise of the generated reactive powers until the exhaustion of the reserves of that region.

3) In the vicinity of the bifurcation point, a static model represents very poorly the system and may lead to inappropriate corrective actions. Here, the use of a dynamic model is in order. Indeed, for heavy load conditions, the

smallest eigenvalues move toward zero, shortening the time response of the system voltages to any perturbation. Therefore, a good voltage control design should consider both static and dynamic modeling of the system.

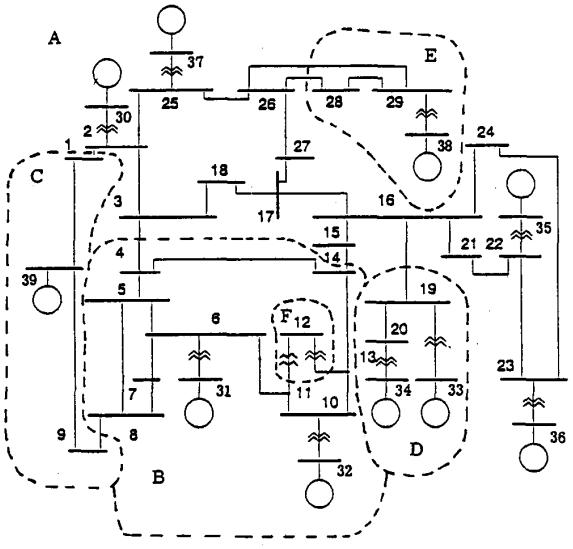

Figure 1. Coherent Regions of the New England 39 Bus System For Light Loading Conditions

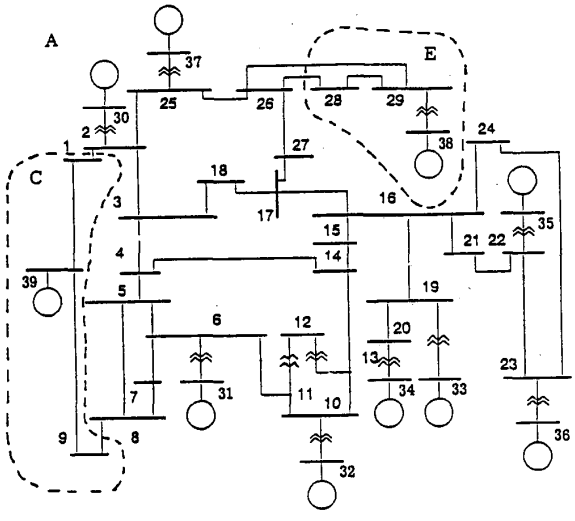

Figure 2. Coherent Regions of the New England 39 Bus System For Heavy Loading Conditions

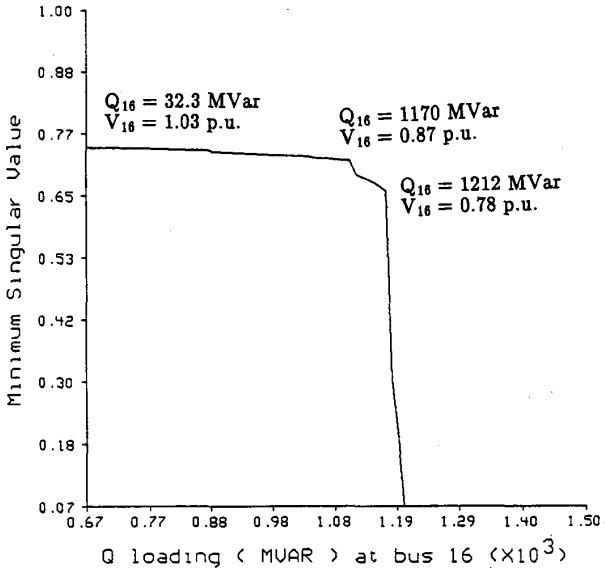

Figure 3. Minimal Singular value of the Jacobian Matrix

REFERENCES

[1] L. Mili, T. Baldwin, and R. Adapa, "Phasor Measurement Placement for Voltage Stability Analysis of Power Systems", *the 29th IEEE Conference on Decision and Control*, Honolulu, Hawaii, Dec. 5–7, 1990, pp. 3033–3038.

[2] P–A Löf, T. Smed, G. Andersson, and D. J. Hill, "Fast Calculation of a Voltage Stability Index", 91 WM 203–0 PWRS, IEEE / PES 1991 Winter Meeting, New York, Feb. 3–7, 1991.

[3] M. M. Begovic, and A. G. Phadke, "Voltage Stability Assessment through Measurement of a Reduced State Vector", *IEEE Transactions on Power Systems*, Vol. PWRS–5, No.1, Feb. 1990, pp. 198–203.

Manuscript received March 4, 1991.

M. Begovic, A. Phadke: The authors appreciate the interest of the discussers in their paper. Our answers are:

To Dr. Dobson: We agree with his remark on genericity of the saddle node bifurcation. An early analysis of the relationship between static bifurcations, and saddle node bifurcations in particular, with voltage collapse, can be found in reference [2] of our paper. Dr. Dobson's papers ([1] and [2] in his list) produced a valuable contribution to that foundation (essentially based on steady-state analysis) by proposing a post-bifurcation dynamic model as a movement along the unstable part of the center manifold of the bifurcating equilibrium. Our results are in agreement with the findings in Dr. Dobson's papers. Our remark about dynamics of the higher-order bifurcations was misunderstood, however. In large scale power systems (typically with several thousand buses and several hundred generators), even the determination of the bifurcation value(s) of the parameter(s) and the initial direction of the post-bifurcation trajectories may become non-trivial tasks (computationally), especially when the objectives are real-time monitoring and control. The ongoing controversy about the choice of a suitable proximity indicator is partly due to the above considerations. Our remark reflects concern with primarily *quantitative* aspects of the problem, for our main objectives are directed towards preventive control rather than post mortem diagnosis. Regarding the fourth equation of (3) in our paper, it represents the strict condition for development of voltage collapse, without any angular instability. We fully agree with Dr. Dobson that such instability is less likely to develop than some combination of voltage and angular instabilities, where fourth equation indeed would not be necessary. The last two comments may be addressed together. It is correct that $\sigma_{min}\{J\}$ is discontinuous in $PV - PQ$ transition points of the generators, and that the total generated reactive power depends on the system configuration and loading. Our intent, however, is not to

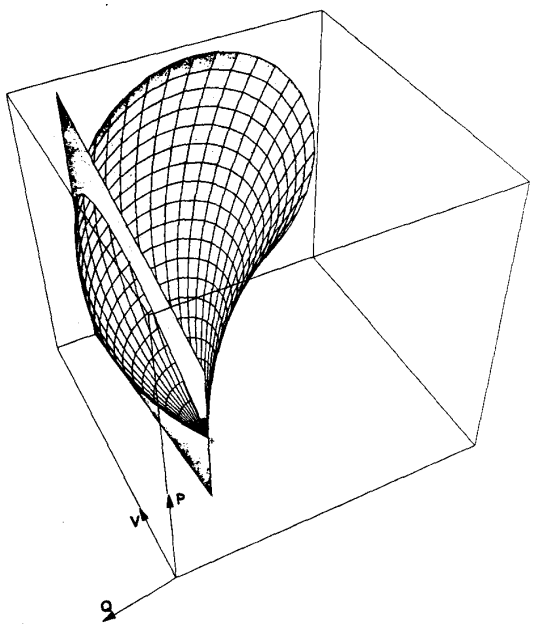

Figure 1. Load voltage vs. loading parameters P and Q in the sample system described in the text.

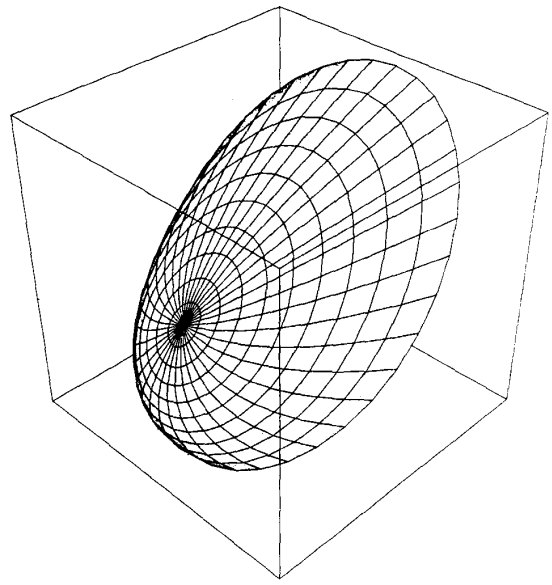

Figure 2. Generated reactive power vs. loading parameters in the sample system.

propose a measure of voltage stability margin, but rather to take advantage of the *sensitivity* analysis of convenient, easy to calculate quantities in order to detect the vulnerable locations in the system and reinforce them with appropriate amount of remedial actions. Let us illustrate this point on power system model similar to the one used by the discusser: a single generator (whose terminal voltage is maintained at 1.0 *pu*), connected through transmission line of the admittance $Y_{12} = 0 - j2$ *pu* to a PQ load. *Figure* 1 represents the mathematically possible solutions for load voltage V in terms of loading parameters P and Q. The coordinate $(0,0,0)$ is in the apex of the shown surface while positive directions for P, Q, and V are identified by arrows. The intersection of the solution surface with a vertical plane $Q = const$ (shown for $Q = 0$) produces familiar $P - V$ curves while intersections with horizontal planes $P = const$ produce $Q - V$ curves. Finally, intersections with vertical planes $V = const$ produce circle diagrams in the $P - Q$ plane, shown here for load voltages between 0 and 1. The longitudinal lines shown in *Figure* 1 represent the solutions having the same value of the difference between voltage phase angles θ_{12} at the ends of the transmission line. The sensitivities of the generated reactive power w.r.t. P and Q are

$$S = \left[\begin{array}{cc} \frac{\partial Q_g}{\partial P} & \frac{\partial Q_g}{\partial Q} \end{array} \right] = \frac{V}{2V\cos\theta_{12} - 1} \left[\begin{array}{cc} 2\sin\theta_{12} & -1 \end{array} \right]$$

The bifurcation points may be calculated from the first three equations of (3) in the paper: the solution is $2V^0 \sin\theta_{12}^0 - 1 = 0$, and it produces

$$\lim_{(V,\theta)\to(V^0,\theta^0)} \|S\| = \infty$$

Figure 2 represents the generated reactive power in terms of loading parameters P and Q for load voltages between 0 and 1, and projection of the bifurcation points onto $P - Q$ plane. The eigenvalues of the Jacobian matrix are

$$\lambda_{1,2} = \frac{1}{2}[\xi \pm \sqrt{\xi^2 + \beta}]$$

$$\xi = 2V + V\cos\theta - \cos\theta$$

$$\beta = -4(2V\cos\theta - 1)$$

and in the bifurcation, they become

$$\left[\begin{array}{cc} \lambda_1 & \lambda_2 \end{array} \right] = \left[\begin{array}{cc} 0 & 2V^0 + V^0\cos\theta^0 - \cos\theta^0 \end{array} \right]$$

showing that the bifurcation is of a saddle node type almost everywhere in $\{(V^0, \theta^0) \mid (0 \le V^0 \le 1)\ (2V^0 sin\theta_{12}^0 - 1 = 0)\}$. Even though the generated reactive power is clearly bounded and dependent upon loading, its gradients w.r.t. loading parameters P and Q grow infinitely when the state approaches bifurcation. This can be easily visualised from *Figure* 2. By the same token, gradients of generated reactive power w.r.t. loading can be monitored in larger power system and used for identification of critical loads in near bifurcating states. The application of reactive support as a remedial action in this case will effectively decrease the reactive load component and shift the operating point away from bifurcation, toward lower values of Q_g. Load shedding would reduce both P and Q, also moving the operating point away from bifurcation. It is clear that any control with nonzero component along the direction of active loading should be avoided, if possible, as it would decrease the reliablity of supply.

To Mr. Baldwin and Dr. Mili: 1) We did not utilise coherency in our calculations. We propose coherency to be considered as a tool when power system size is large enough so that total generated reactive power becomes insensitive to variations of individual loads. We agree with discussers' comments on the dynamics of the coherent regions, and especially with their suggestion to incorporate generators operating at reactive capability limits in the coherent groups. We do not anticipate major problems in accounting for the dynamics of coherent regions in such calculations, but that problem requires a thorough consideration in its own right and is beyond the scope of this paper. 2) The presented example very nicely illustrates Dr. Dobson's and our comments on $\sigma_{min}\{J\}$ as a proximity indicator. Minimum singular value of Jacobian is discontinuous in a way which is not easy to account for, because $PV - PQ$ transitions of the generators depend on the system configuration and the loading pattern. We feel that various indicators based on energy measures offer better reliability in identifying the closeness to voltage collapse. They are not discontinuous and have less pronounced nonlinearity w.r.t. loading parameters of the network ([15], and *Figure* 6 in the paper). The discussers' comment on the rapid rise of the generated reactive power inside coherent regions is correct, but we prefer to calculate voltage collapse conditions from the complete system state and parameter vectors, or with approximations such as those introduced in reference [4], where reduced measurement set is proposed for approximate calculation of the minimum singular value of Jacobian matrix *of the whole system*. The concept of coherent regions is used there to define conditions for approximation, rather than to evaluate the reactive power balance inside coherent regions. 3) We believe that voltage instabilities caused by slow fluctuations of system loading can accurately and efficiently be analyzed using the static model. An example of such instability can be found in [10], where the authors reported the rate of increase of load of 400 MW/min, and the time of development of instability of 15 − 20 minutes. Static system model is deemed quite appropriate in such cases. On the other hand, contingency triggered voltage instabilities certainly call for dynamic modeling, although the only emergency control available in such situations would be limited to decentralised action of protective equipment. The application of new technologies for monitoring and control, having faster feedback loops, would allow to bridge the gap and accomplish the system-wide control of power system dynamics in real-time. The authors expect that to happen in the foreseeable future.

Manuscript received August 5, 1991.