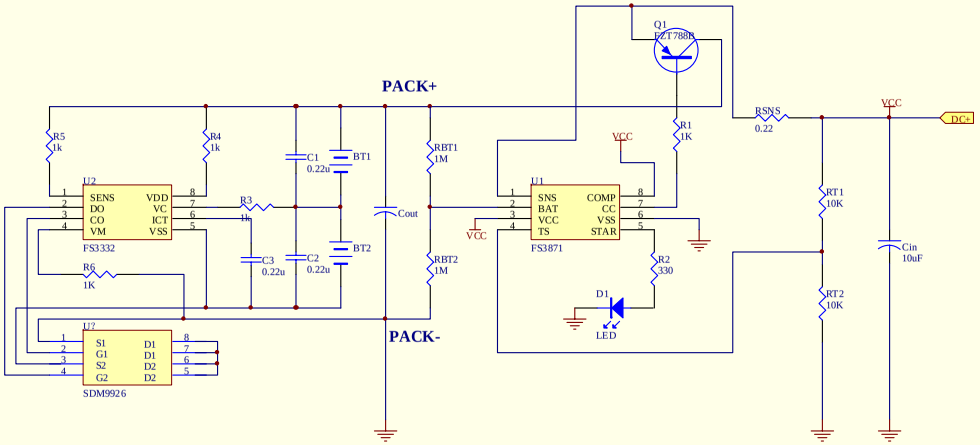

Title		
Size B	Number	Revision
Date: 18-Jul-2006		Sheet of
File: E:\charger\FS3871.ddb		Drawn By: