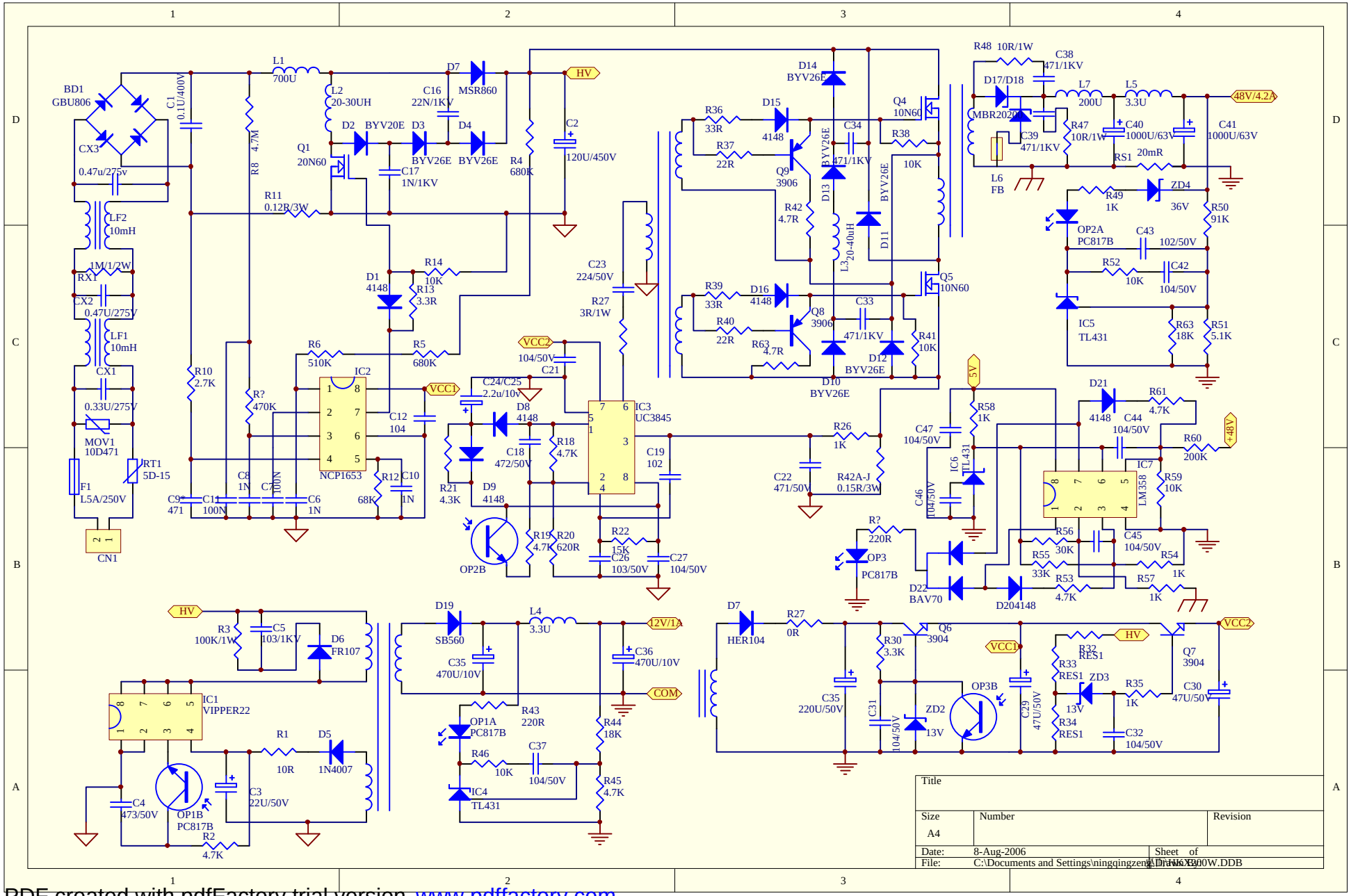

Title		
Size A4	Number	Revision
Date: 8-Aug-2006	Sheet of	
File: C:\Documents and Settings\ningqingzen\My Documents\300W.DDB		

PDF created with pdfFactory trial version www.pdffactory.com