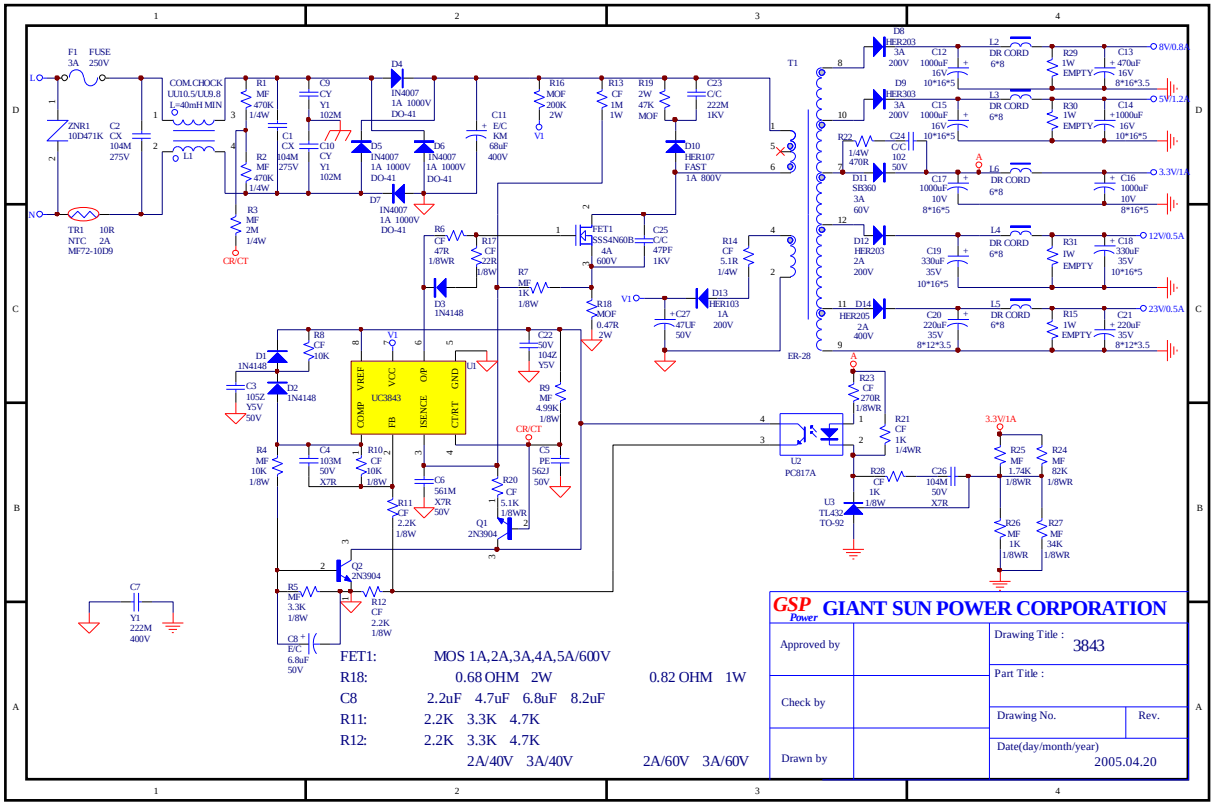

PDF Creator: PDF4U Pro DEMO Version. If you want to remove this line, please purchase the full version