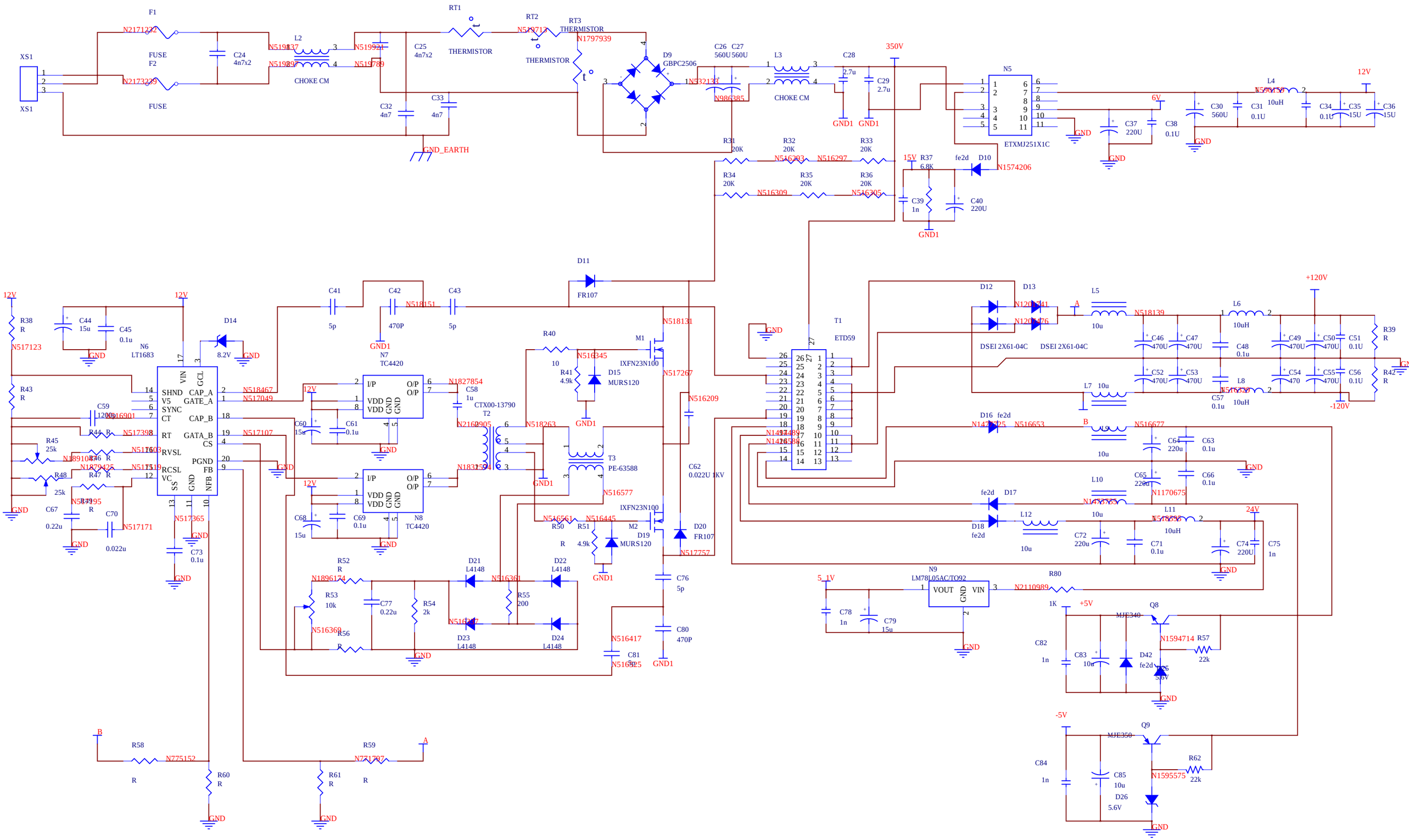
XS1
F1
FUSE
F2
FUSE
C24
4n7x2
L2
CHOKE CM
C25
4n7x2
RT1
THERMISTOR
RT2
THERMISTOR
RT3
THERMISTOR
C32
4n7
C33
4n7
GND_EARTH
D9
GBPC2506
C26 C27
560U 560U
L3
CHOKE CM
C28
2.7u
C29
2.7u
350V
N5
ETXMJ251X1C
6V
C37
220U
C38
0.1U
C30
560U
L4
10uH
C31
0.1U
C34
0.1U
C35
15U
C36
15U
12V
R31
20K
R32
20K
R33
20K
R34
20K
R35
20K
R36
20K
15V
R37
6.8K
fe2d
D10
C39
1n
C40
220U
GND1
GND
D11
FR107
C41
5p
C42
470P
C43
5p
N7
TC4420
N8
TC4420
R38
R
C44
15u
C45
0.1u
N6
LT1683
D14
8.2V
R43
R
C59
1200p
R44
R
R45
25k
R46
R
R47
R
R48
25k
C67
0.22u
C70
0.022u
C60
15u
C61
0.1u
C68
15u
C69
0.1u
C73
0.1u
R40
10
R41
4.9k
D15
MURS120
M1
IXFN23N100
C58
1u
CTX00-13790
T2
T3
PE-63588
M2
IXFN23N100
D19
MURS120
D20
FR107
C62
0.022U 1KV
C76
5p
C80
470P
C81
R50
R51
4.9k
R52
R
R53
10k
C77
0.22u
R54
2k
R55
200
R56
R
D21
L4148
D22
L4148
D23
L4148
D24
L4148
T1
ETD59
D12
D13
DSEI 2X61-04C
DSEI 2X61-04C
L5
10u
L6
10uH
C46
470U
C47
470U
C48
0.1u
C49
470U
C50
470U
C51
0.1U
R39
R
C52
470U
C53
470U
C54
470
C55
470U
C56
0.1U
R42
R
L7
10u
L8
10uH
C57
0.1u
+120V
-120V
D16
fe2d
L9
10u
C64
220u
C63
0.1u
C65
220u
C66
0.1u
L10
10u
L11
10uH
C72
220u
C71
0.1u
C74
220U
C75
1n
D17
fe2d
D18
fe2d
L12
10u
24V
N9
LM78L05ACTO92
VOUT
GND
VIN
R80
1K
+5V
Q8
MJE340
C78
1n
C79
15u
C82
1n
C83
10u
D42
fe2d
R57
22k
-5V
Q9
MJE350
C84
1n
C85
10u
D26
5.6V
R62
22k
R58
R
R59
R
R60
R
R61
R
A
B
Title
Size
A3
Document Number
Rev
?
Date:
Thursday, July 20, 2006
Sheet
2
of
3