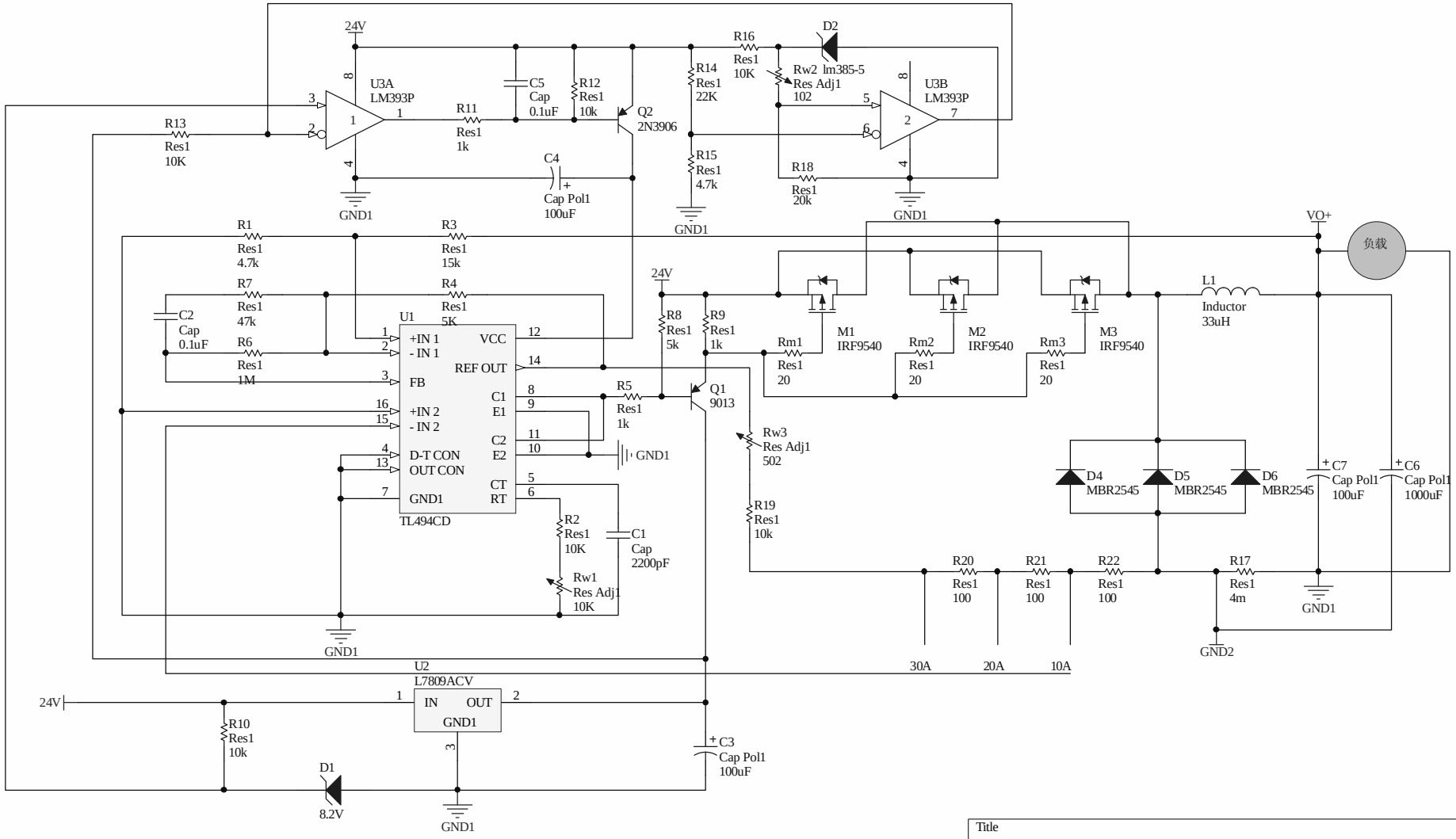

Title		
Size A4	Number	Revision
Date: 2006-11-21		Sheet of
File: D:\W\30ACC.SchDoc		Drawn By: