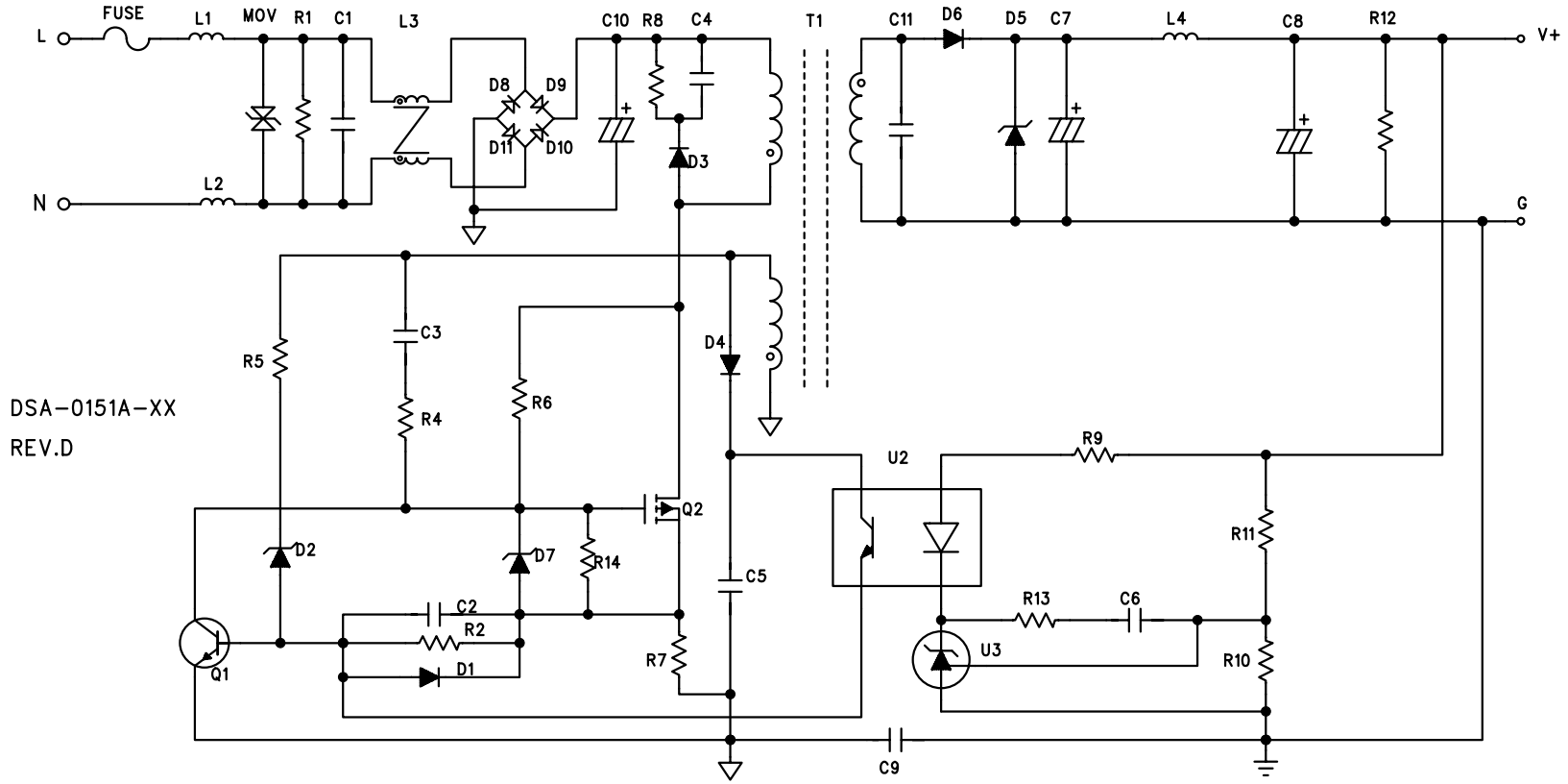

			DEPARTMENT	SCALE	UNIT	TOLERANCE	PART NAME	PART NO.	REV
			R&D SPS				C.K.T	66S015100-04	D
			APPD.	CKD.	SAFETY	MATERIAL	DWG BY: DATE	DRAWING NO.	REV
MODEL NO:	DSA-0151A-XX	PAGE 1 OF 1					HENRY		D