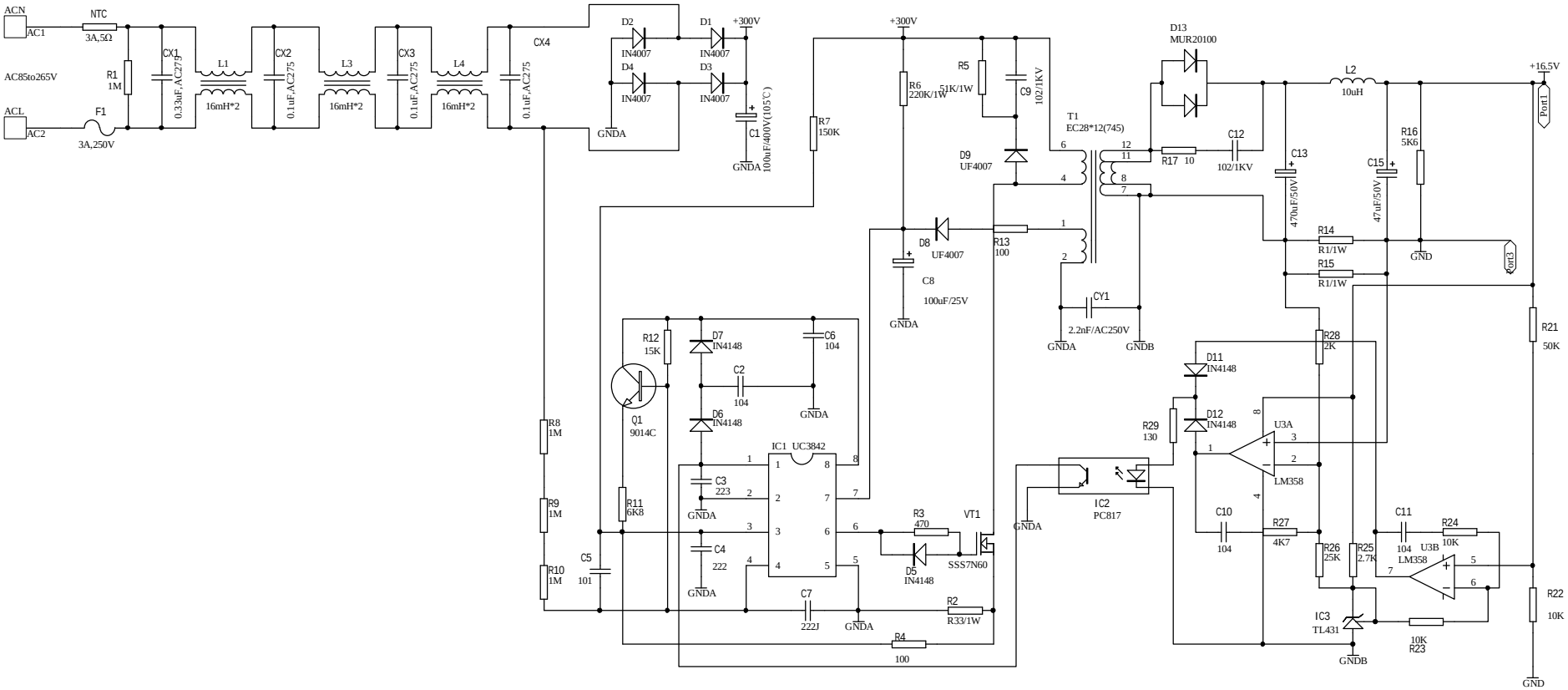

Title		
Size A3	Number	Revision
Date: 28-Mar-2007		Sheet of
File: F:\sino\15v4a\PCB12V50.ddb		Drawn By: