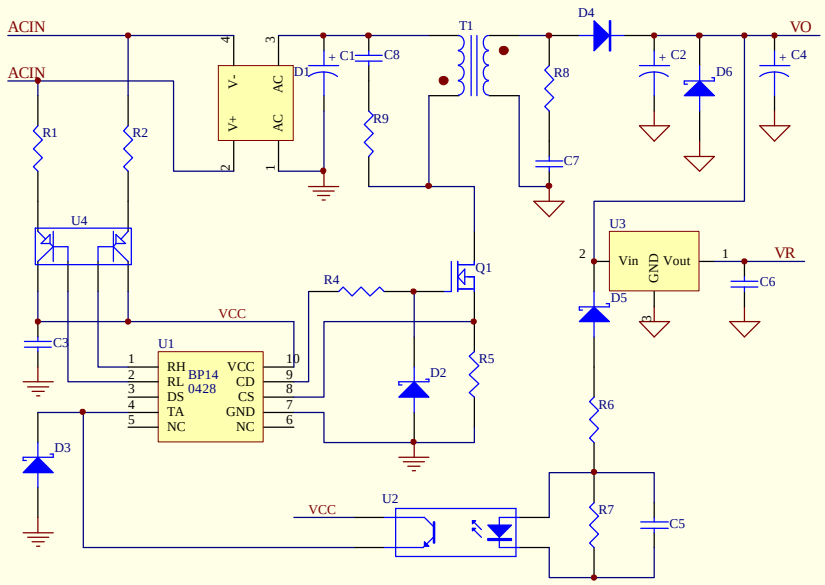

Title		
Size A4	Number	Revision
Date: 16-Apr-2007		Sheet of
File: E:\pcb\shenya\113055~1.DDB		Drawn By:

PDF created with FinePrint pdfFactory Pro trial version www.pdffactory.com