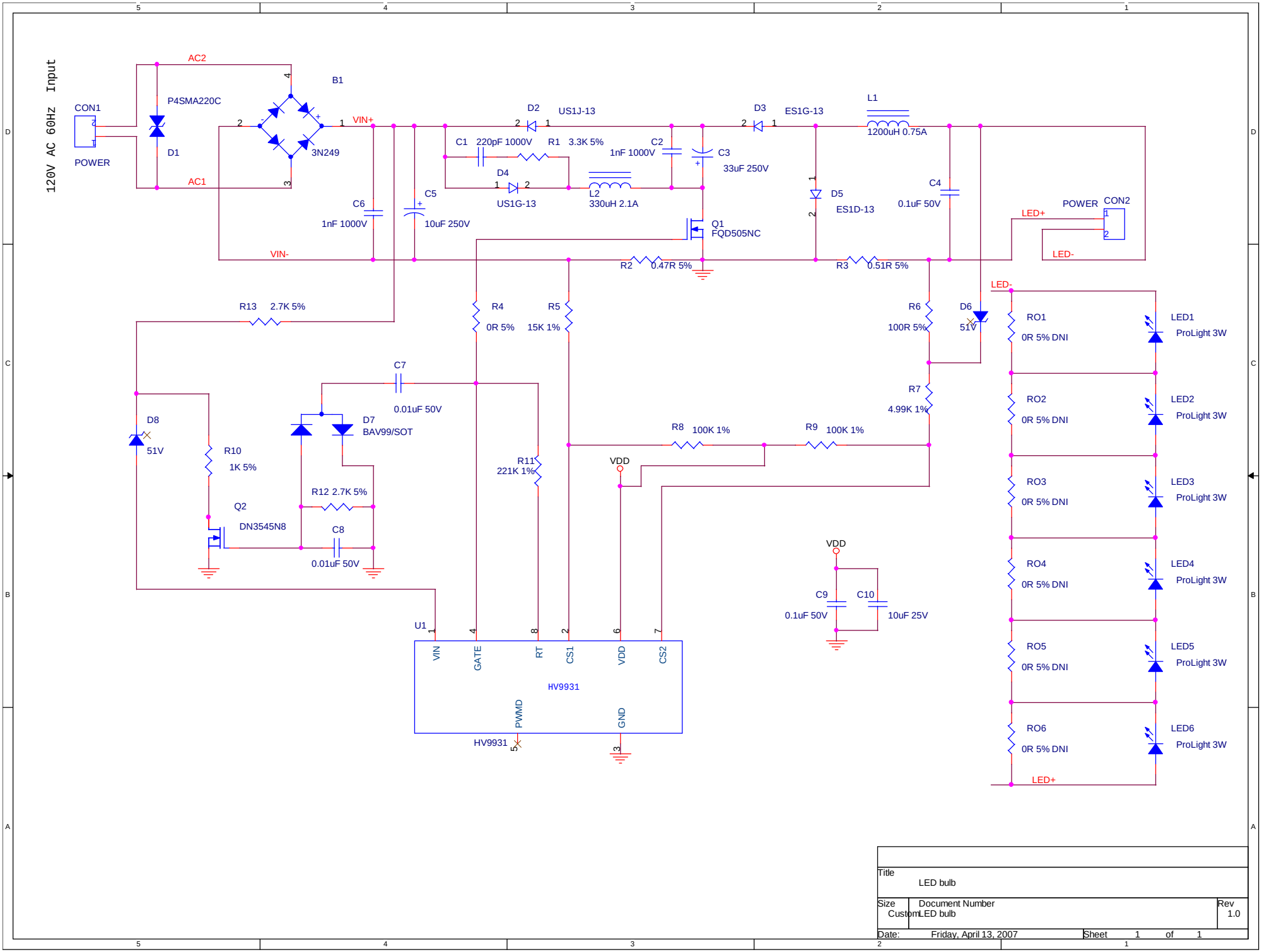


PDF created with pdfFactory trial version www.pdffactory.com