REVISION RECORD			
LTR	ECO NO:	APPROVED:	DATE:

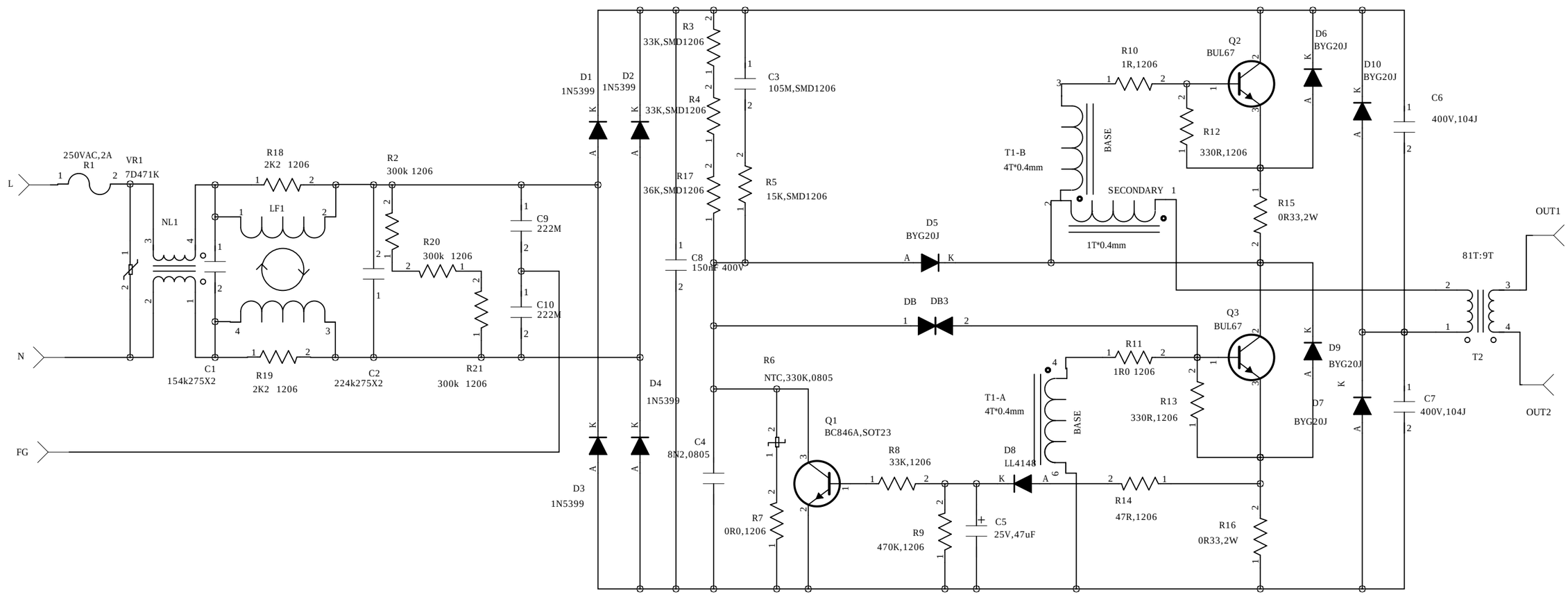

			Number	Sheet	Company
			1	1/1	
Design	Item Manager	Checked	Approved	Date	Revision