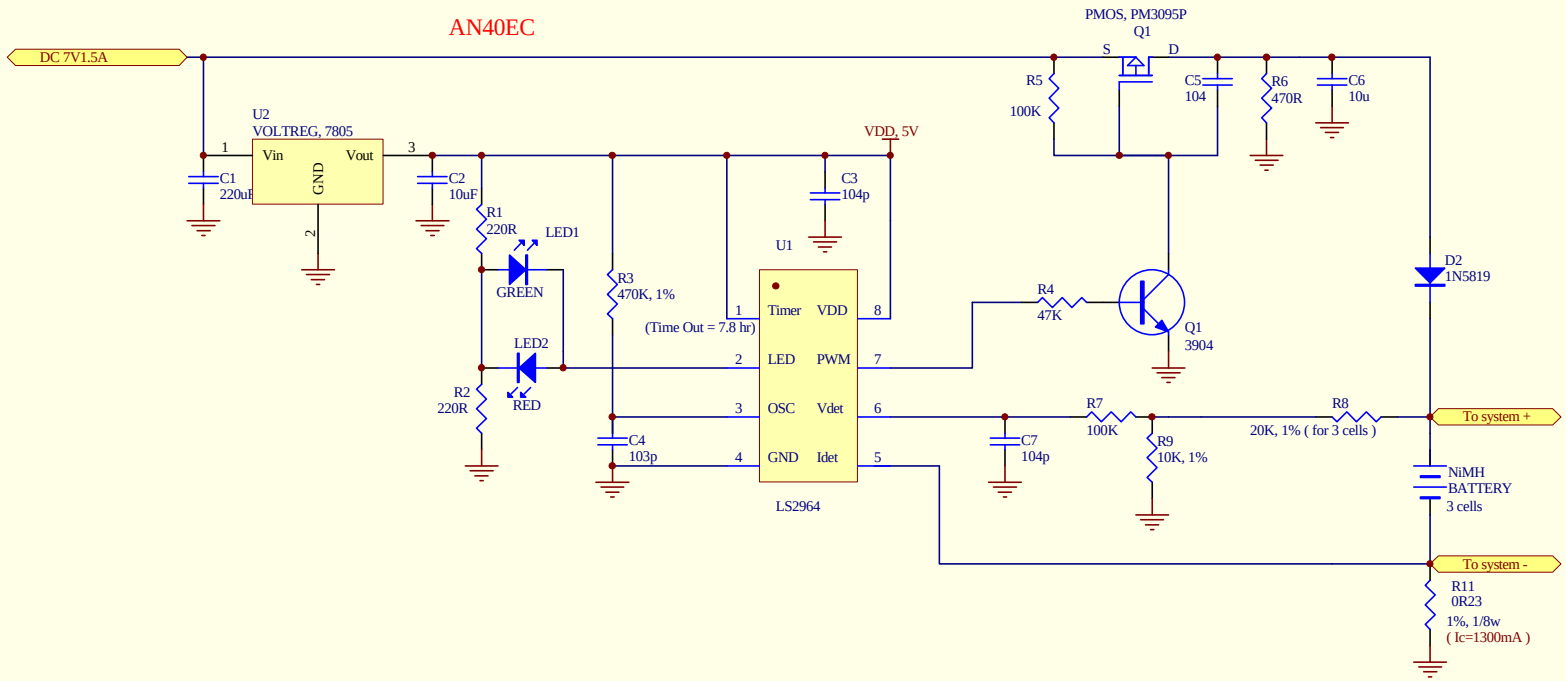

Title	**LS2964 Application circuit**	http://www.linkas.com.tw/ Remark: Suggested circuit maybe changed without notice.
Size A4	Number 7.5V DC for 3 cells	Revision R2.1
Date: 21-Oct-2004		Sheet of
File: D:\0APP\AN\A40EC64A.SCH		Drawn By: