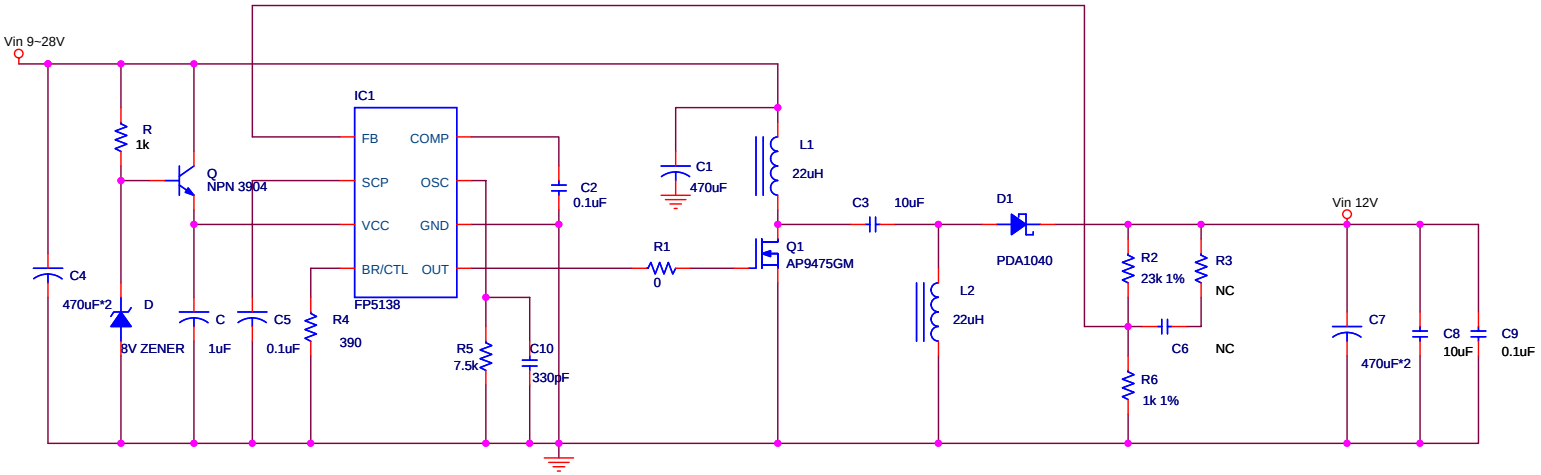

Title	FP5138 SEPIC Application Circuit	
Size B	Document Number <Doc>	Rev <RevCode>
Date: Monday, August 06, 2007	Sheet 1 of 1	