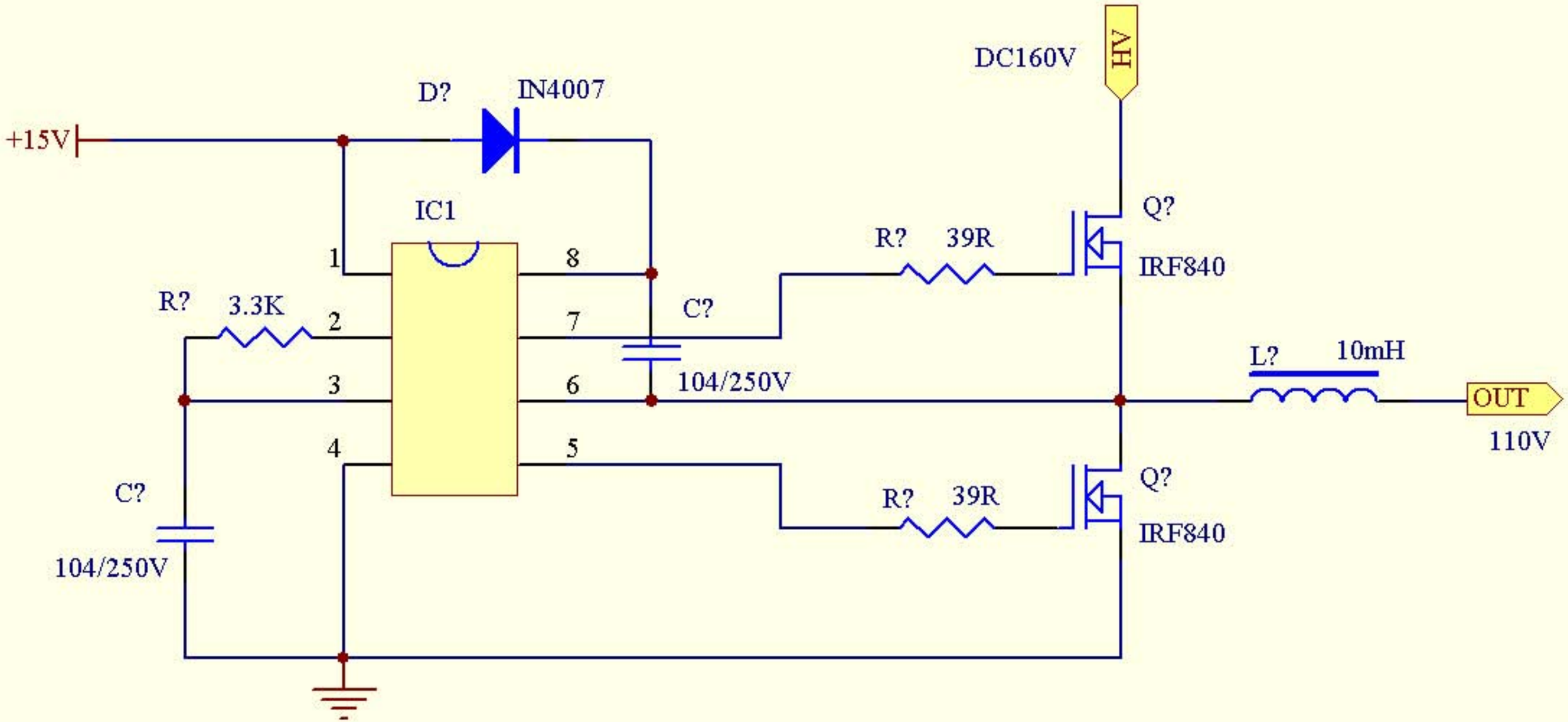
+15V
D?
IN4007
DC160V
HV
IC1
1
2
3
4
8
7
6
5
R?
3.3K
C?
104/250V
R?
39R
Q?
IRF840
L?
10mH
OUT
110V
R?
39R
Q?
IRF840
C?
104/250V