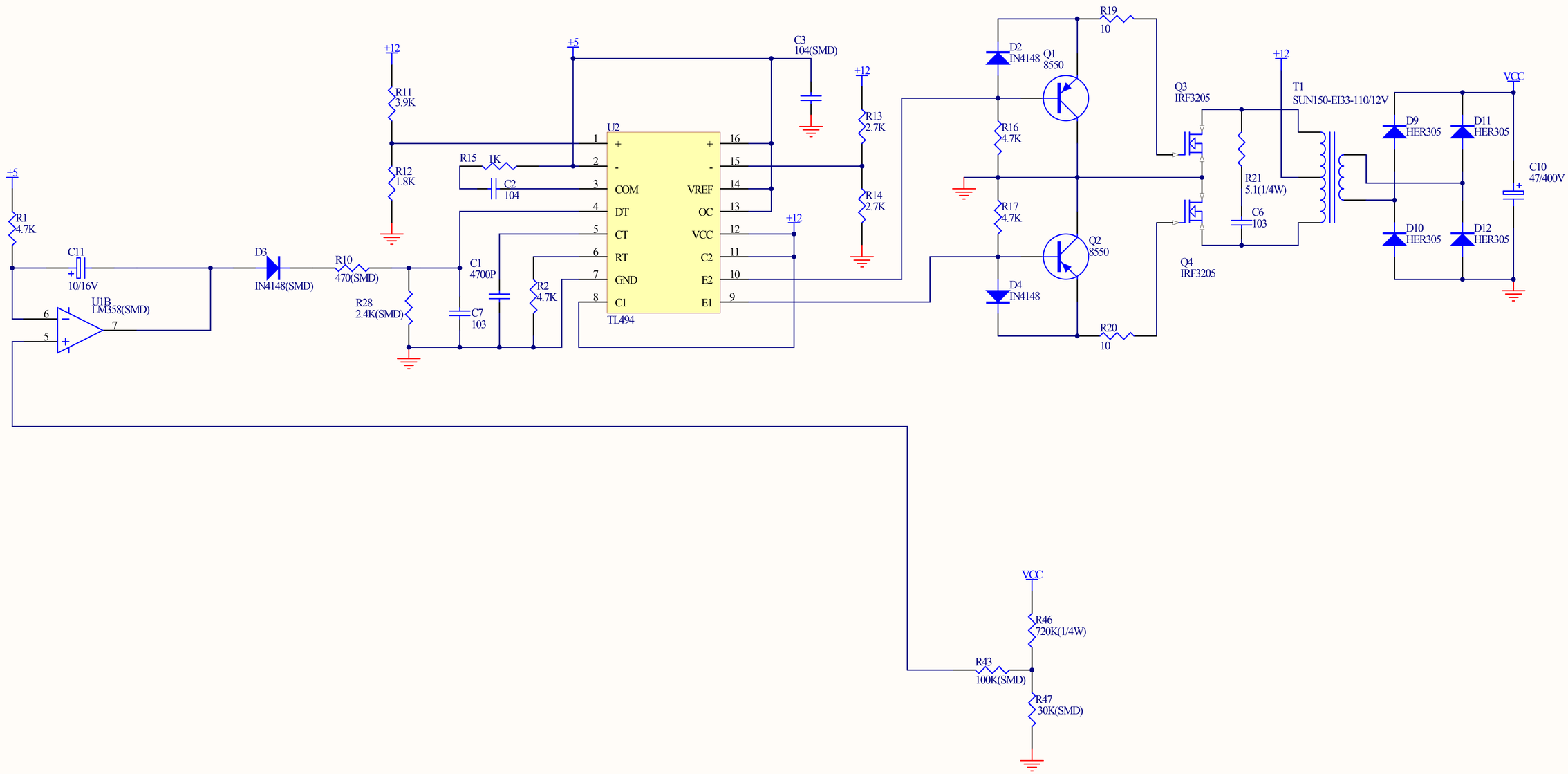

12V SUN-150A-110