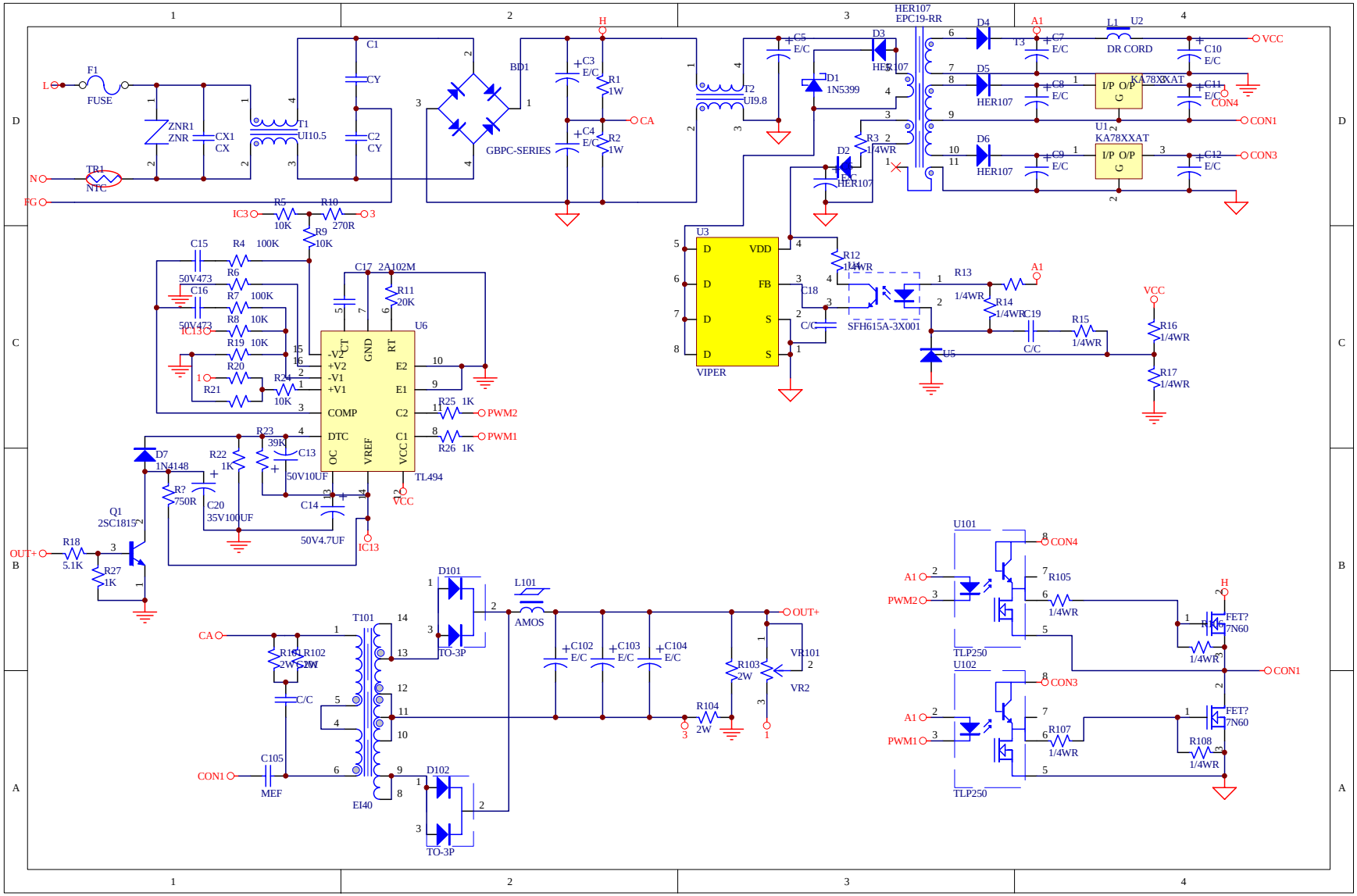
L
N
FG
F1
FUSE
TR1
NTC
ZNR1
ZNR
CX1
CX
T1
UI10.5
C1
CY
C2
CY
BD1
GBPC-SERIES
C3
E/C
C4
E/C
R1
1W
R2
1W
H
CA
T2
UI9.8
C5
E/C
D1
1N5399
D3
HER107
HER107
EPC19-RR
D2
HER107
R3
1/4WR
D4
D5
D6
HER107
HER107
HER107
A1
C7
E/C
C8
E/C
C9
E/C
L1
U2
DR CORD
C10
E/C
C11
E/C
C12
E/C
VCC
CON4
CON1
CON3
U1
KA78XXAT
I/P O/P
G
IC3
R5
10K
R10
270R
R9
10K
C15
R4
100K
50V473
C16
R6
R7
100K
R8
10K
IC13
R19
10K
R20
R21
R24
10K
C17
2A102M
R11
20K
U6
-V2
+V2
-V1
+V1
COMP
DTC
CT
GND
RT
E2
E1
C2
C1
OC
VREF
VCC
TL494
R25
1K
PWM2
R26
1K
PWM1
R23
39K
C13
50V10UF
R22
1K
D7
1N4148
R?
750R
C20
35V100UF
C14
50V4.7UF
Q1
2SC1815
R18
5.1K
R27
1K
OUT+
U3
VIPER
D
VDD
FB
S
R12
1/4WR
C18
C/C
SFH615A-3X001
R13
1/4WR
R14
1/4WR
C19
C/C
R15
1/4WR
U5
R16
1/4WR
R17
1/4WR
D101
TO-3P
L101
AMOS
T101
EI40
R101
2W
R102
2W
C/C
C105
MEF
D102
TO-3P
C102
E/C
C103
E/C
C104
E/C
R103
2W
R104
2W
VR101
VR2
U101
U102
TLP250
R105
R107
1/4WR
FET?
7N60
R106
R108
PWM2
PWM1